MADE IN GERMANY
MANUFACTURED BY
SCHUNK
MADE IN GERMANY

Hand in hand for tomorrow

SCHUNK®

Product data sheet

Feed-through modules COS

Robust. Reliable. Flexible.

Optional modules COS

Optional modules for feeding through different media such as electrical signals, pneumatics, fluids and vacuum.

Field of application

For fast media transfer with short change-over times between change master and change adapter in order to supply the end effector with the required media.

Advantages – Your benefits

Fits perfectly for easy combination with SCHUNK tool changers

Wide range of different variants for feeding through of various media

Module variety the appropriate module for the required media transfer for every size of SCHUNK tool changers

Connector variants with radial, axial, and side cable outlet for a low interfering contour in restricted spaces

Combination of several optional modules for maximum flexibility of the tool changer

Minimum wear for a high number of change cycles and a long service life

Customer-specific designs available on request the suitable solution for any application

Cable connector, cable extensions and protection covers available on request for a comprehensive complete solution from one source

Application example

① Automatic tool changers CPS
② Optional modules COS
③ Modular storage rack CTS
④ Universal gripper EGU
⑤ 2-finger parallel gripper JGP-P

SCHUNK offers more ...

The following components make the product even more productive – the suitable addition for the highest functionality, flexibility, reliability, and controlled production.

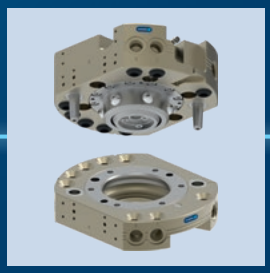

Tool changer

Manual change system

Pallet change system

ⓘ For more information on these products can be found on the following product pages or at schunk.com.

Overview of optional modules and mounting pattern

	COS	S1	S7	K	J	L	L1	L2
Optional modules for								
Signal								
Power								
Servo								
Communication								
Welding								
Pneumatics								
Vacuum								
liquids								
Hydraulics								
S1 screw connection diagram suitable for								
CPS 001								
S7 screw connection diagram suitable for								
CPS 007								
CPS 011								
K screw connection diagram suitable for								
CPS 020								
CPS 021 side A								
CPS 060 side A								
J screw connection diagram suitable for								
CPS 021 side B with adapter plate								
CPS 029								
CPS 040								
CPS 041								
CPS 046								
CPS 060 side B with adapter plate								
CPS 071								
CPS 076								
CPS 110								
CPS 160								
L screw connection diagram suitable for								
CPS 210 mounting surfaces B, C, D								
CPS 310 mounting surfaces B, C, D								
CPS 510 mounting surfaces B, C, D								
L1 screw connection diagram suitable for								
CPS 210 mounting surface A								
L2 screw connection diagram suitable for								
CPS 310 mounting surface A								
CPS 510 mounting surface A								

Special designs with modified seals or lubrication are available on request

COS A15

Feed-through modules

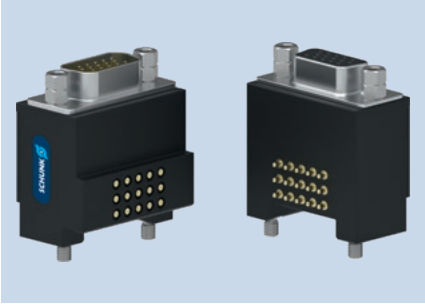

Technical data

Description		COS A15-K	COS A15-A
ID		1586965	1586956
Suitable on		Change head	Tool
Screw connection diagram		S7	S7
Transmission type		Signal	Signal
Weight	[kg]	0.02	0.02
Min./max. ambient temperature	[°C]	5/60	5/60
Number of pin contacts		15	15
Nominal current	[A]	2	2
Alternating voltage	[V AC]	50	50
Direct voltage	[V DC]	50	50
Electrical connection		D-sub connecting plug	D-sub connector
Outlet connection		radial	radial

Combination COS A15-K and COS A15-A

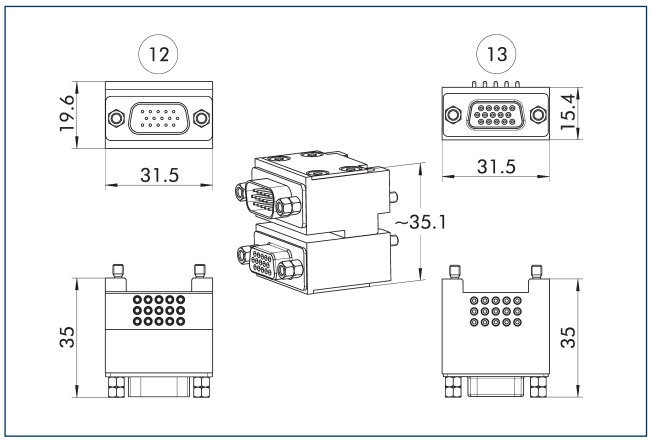

12 Master side
13 Adapter side

Pin assignment for COS A15-K and COS A15-A

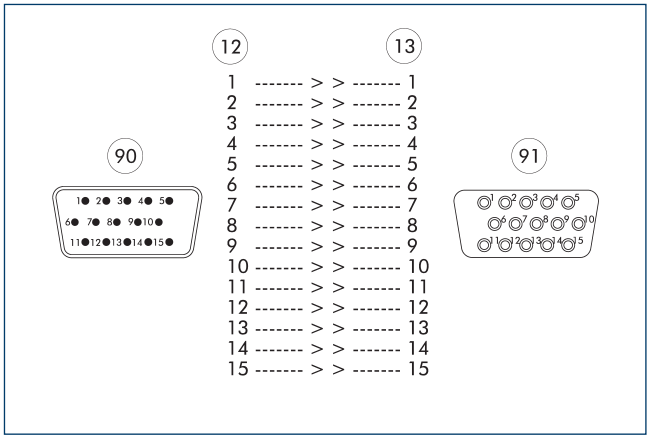

12 Master side
13 Adapter side
90 D-sub connecting plug
91 D-sub connector

Cable connector

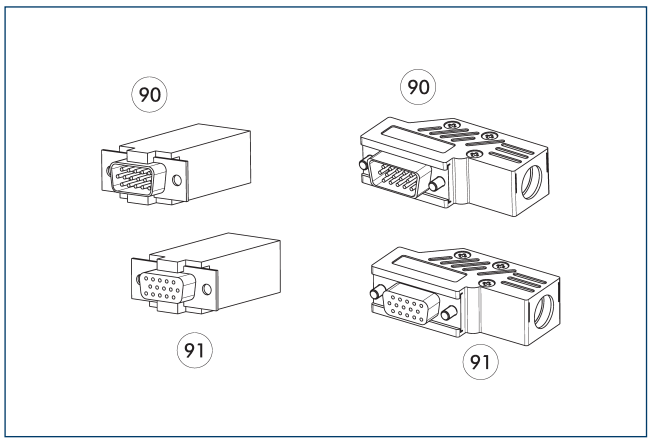

90 D-sub connecting plug
91 D-sub connector

Description	ID
Angled cable connector, robot-side	
KAS-A15-K-90	0301301
Angled cable connector, tool-side	
KAS-A15-A-90	0301302
Straight cable connector, robot-side	
KAS-A15-K-0	0301264
Straight cable connector, tool-side	
KAS-A15-A-0	0301265

ⓘ Detailed information and further cable connectors can be found at schunk.com

COS E06

Feed-through modules

Technical data

Description		COS E06-K	COS E06-A
ID		1586981	1586969
Suitable on		Change head	Tool
Screw connection diagram		S1	S1
Transmission type		Signal	Signal
Weight	[kg]	0.005	0.005
Min./max. ambient temperature	[°C]	5/60	5/60
Number of pin contacts		6	6
Nominal current	[A]	3	3
Alternating voltage	[V AC]	50	50
Direct voltage	[V DC]	50	50
Electrical connection		Solder contacts	Solder contacts
Outlet connection		axial	axial

Combination COS E06-K and COS E06-A

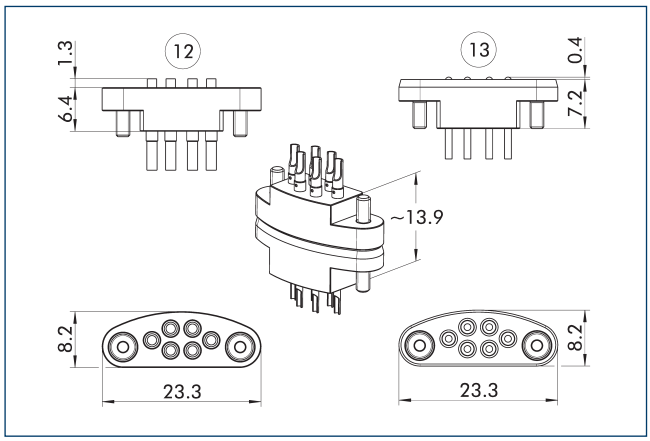

12 Master side
13 Adapter side

Pin assignment for COS E06-K and COS E06-A

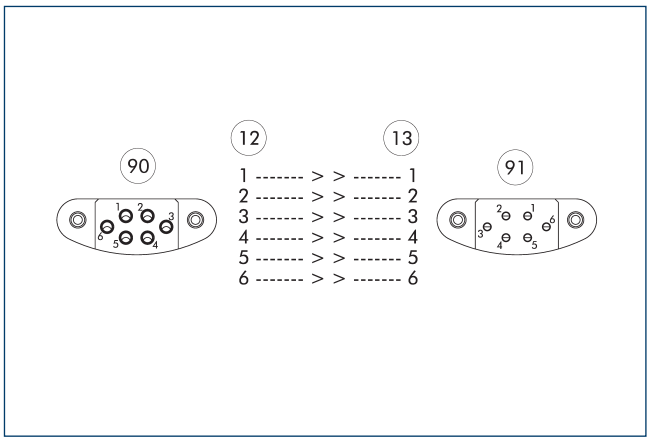

12 Master side
13 Adapter side
90 Solder contacts
91 Solder contacts

COS E10

Feed-through modules

Technical data

Description		COS E10-K	COS E10-A
ID		1586985	1586984
Suitable on		Change head	Tool
Screw connection diagram		S7	S7
Transmission type		Signal	Signal
Weight	[kg]	0.009	0.008
Min./max. ambient temperature	[°C]	5/60	5/60
Number of pin contacts		10	10
Nominal current	[A]	3	3
Alternating voltage	[V AC]	50	50
Direct voltage	[V DC]	50	50
Electrical connection		Solder contacts	Solder contacts
Outlet connection		axial	axial

Combination COS E10-K and COS E10-A

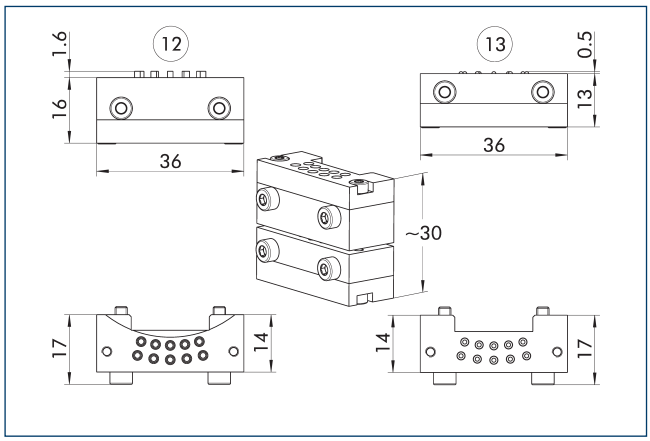

12 Master side
13 Adapter side

Pin assignment for COS E10-K and COS E10-A

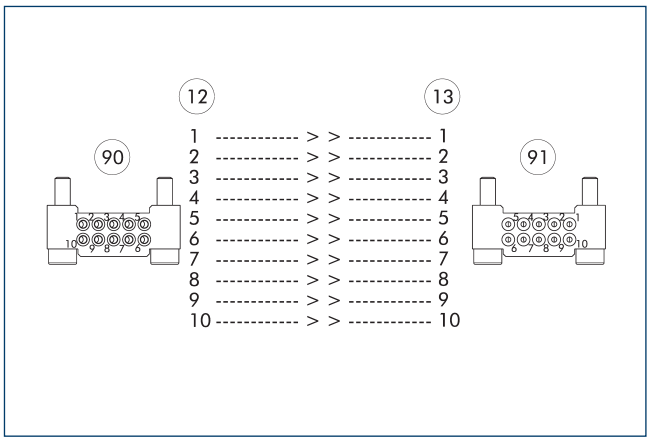

12 Master side
13 Adapter side
90 Solder contacts
91 Solder contacts

COS E20

Feed-through modules

Technical data

Description		COS E20-K	COS E20-A
ID		1586987	1586986
Suitable on		Change head	Tool
Screw connection diagram		S7	S7
Transmission type		Signal	Signal
Weight	[kg]	0.015	0.017
Min./max. ambient temperature	[°C]	5/60	5/60
Number of pin contacts		20	20
Nominal current	[A]	3	3
Alternating voltage	[V AC]	50	50
Direct voltage	[V DC]	50	50
Electrical connection		Solder contacts	Solder contacts
Outlet connection		axial	axial

Combination COS E20-K and COS E20-A

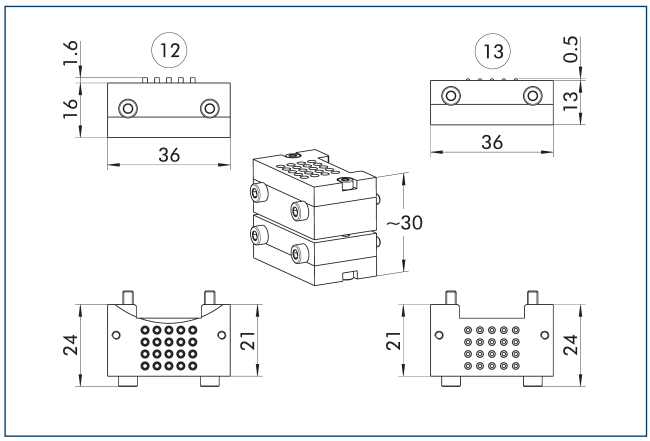

12 Master side
13 Adapter side

Pin assignment for COS E20-K and COS E20-A

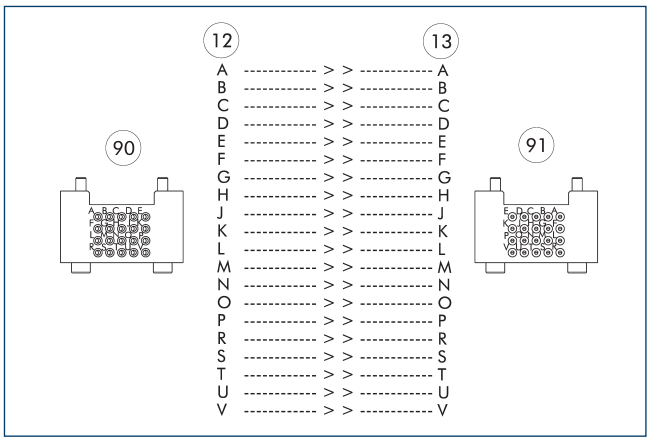

12 Master side
13 Adapter side
90 Solder contacts
91 Solder contacts

COS G19

Feed-through modules

Technical data

Description		COS G19-K	COS G19R-K	COS G19W-K	COS G19-A	COS G14-A
ID		1586544	1586545	1586547	1586543	1586542
Suitable on		Change head	Change head	Change head	Tool	Tool
Screw connection diagram		J	J	J	J	J
Transmission type		Signal	Signal	Signal	Signal	Signal
Weight	[kg]	0.13	0.17	0.17	0.11	0.15
Min./max. ambient temperature	[°C]	5/60	5/60	5/60	5/60	5/60
Protection class IP		IP64 (only in a coupled state)	IP64 (only in a coupled state)	IP64 (only in a coupled state)	IP64 (only in a coupled state)	IP64 (only in a coupled state)
Number of pin contacts		19	15	15	19	14
Nominal current	[A]	3	3	3	3	3
Alternating voltage	[V AC]	250	250	250	250	250
Direct voltage	[V DC]	250	250	250	250	250
Electrical connection		Amphenol PT bayonet lock socket, 19 pins	Amphenol PT bayonet lock socket, 19 pins	Amphenol PT bayonet lock socket, 19 pins	Amphenol PT bayonet lock socket, 19 pins	Amphenol PT bayonet lock socket, 19 pins
Outlet connection		Can be radially swiveled	Can be radially swiveled	Can be radially swiveled	Can be radially swiveled	Can be radially swiveled
Special properties		Can swivel in five positions	Can swivel in five positions, two integrated cables with right-angled M8 socket (A-coded, 3-pin), for connection of the locking and unlocking sensor.	Can swivel in five positions, two integrated cables with straight M8 socket (A-coded, 3-pin), for connection of the locking and unlocking sensor.	Can swivel in five positions	Can be swiveled in five positions, rotary encoder switch for tool coding for 0-15 tools. Designed for max. 0.15 A and 24 V.

Combination COS G19-K and COS G19-A

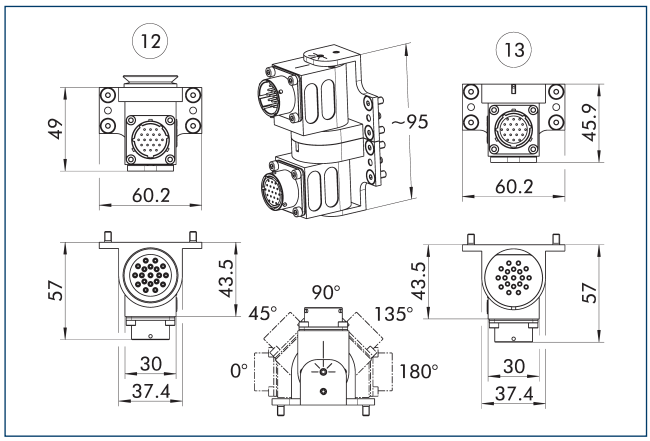

(12) Master side
(13) Adapter side

Combination possibilities G19

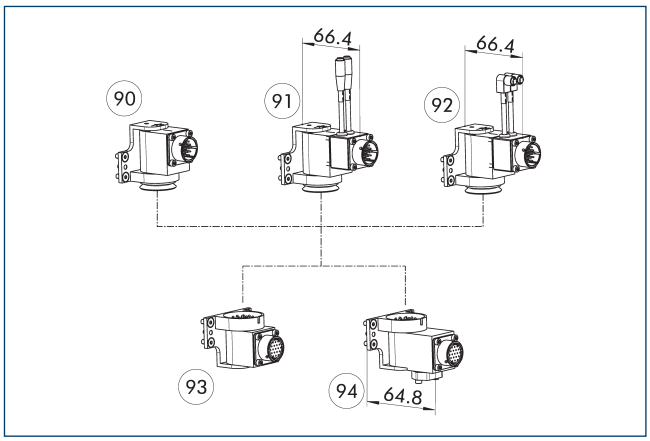

(90) COS G19-K
(91) COS G19W-K
(92) COS G19R-K
(93) COS G19-A
(94) COS G14-A

Pin assignment for COS G19-K with COS G19-A

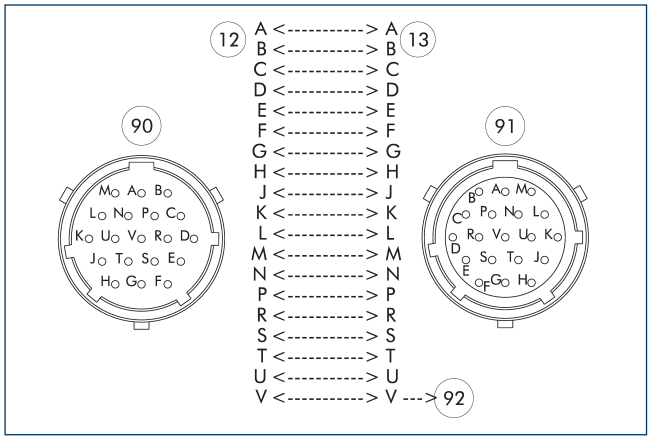

(12) Master side
(13) Adapter side
(90) Amphenol PT bayonet lock connector, 19 pins
(91) Amphenol PT bayonet lock socket, 19 pins
(92) leading pin

Pin assignment for COS G19R-K and COS G19-A

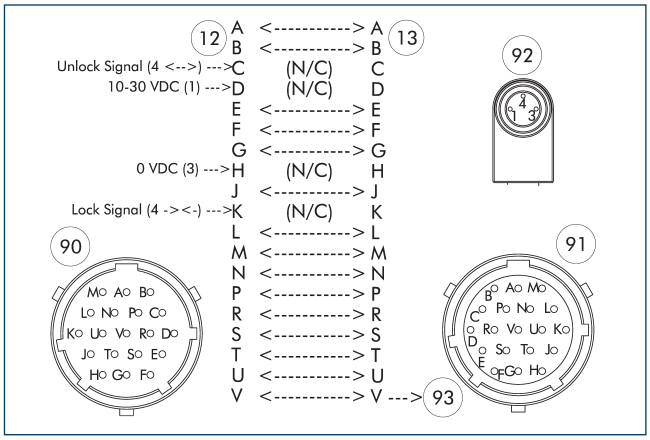

(12) Master side
(13) Adapter side
(90) Amphenol PT bayonet lock connector, 19 pins
(91) Amphenol PT bayonet lock socket, 19 pins
(92) M8 socket, A-coded, 3-pin
(93) leading pin

Pin assignment for COS G19W-K and COS G19-A

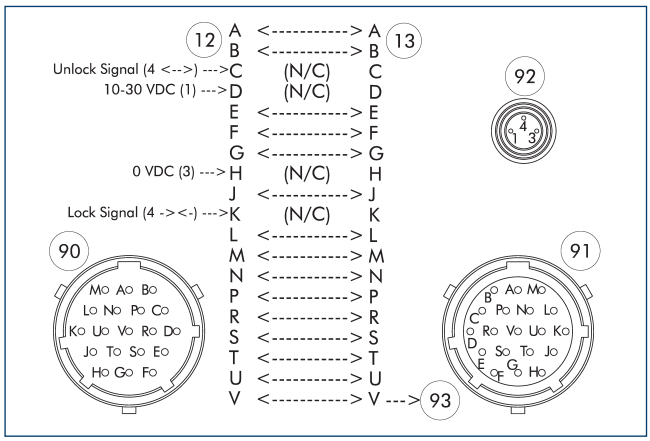

12 Master side
13 Adapter side
90 Amphenol PT bayonet lock connector, 19 pins
91 Amphenol PT bayonet lock socket, 19 pins
92 M8 socket, A-coded, 3-pin
93 leading pin

Pin assignment for COS G19-K and COS G14-A

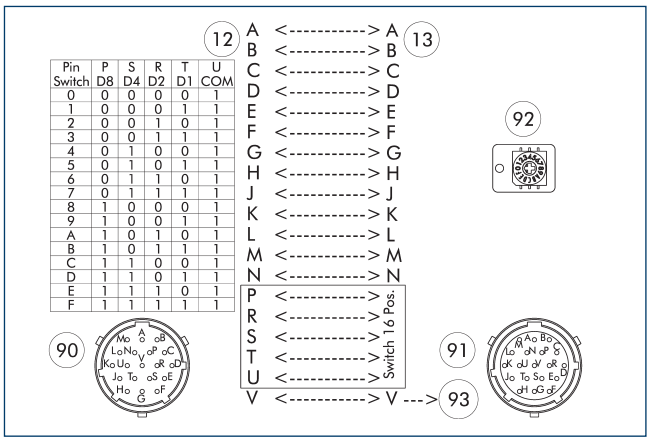

Pin Switch	P D8	S D4	R D2	T D1	U COM
0	0	0	0	0	1
1	0	0	0	1	1
2	0	0	1	0	1
3	0	0	1	1	1
4	0	1	0	0	1
5	0	1	0	1	1
6	0	1	1	0	1
7	0	1	1	1	1
8	1	0	0	0	1
9	1	0	0	1	1
A	1	0	1	0	1
B	1	0	1	1	1
C	1	1	0	0	1
D	1	1	0	1	1
E	1	1	1	0	1
F	1	1	1	1	1

12 Master side
13 Adapter side
90 Amphenol PT bayonet lock connector, 19 pins
91 Amphenol PT bayonet lock socket, 19 pins
92 Rotary encoder switch for tool coding of 0-15 tools.
93 leading pin

Cover COS JPC-A

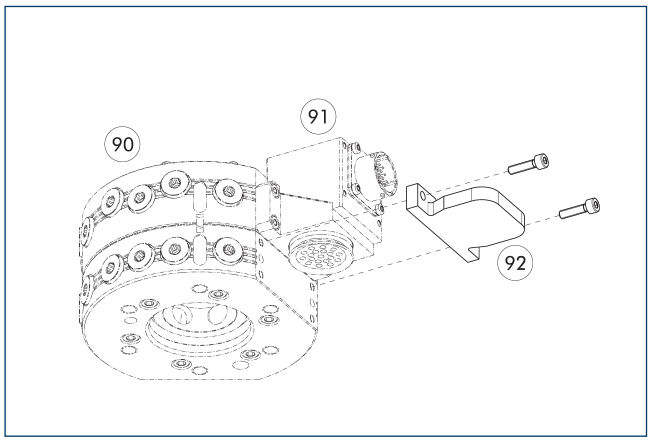

90 Automatic tool changers CPS
91 Optional module COS master
92 Cover COS JPC-A

Description	ID	Suitable for
Cover		
COS JPC-A	1584095	For many electrical modules with screw-on pattern J

Cable plug/cable extension

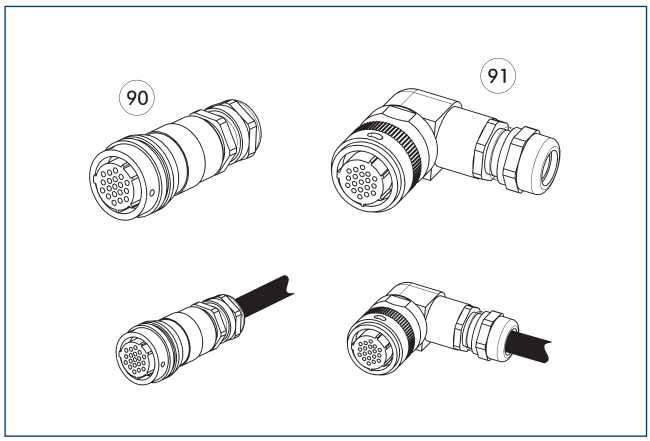

90 Plug/socket straight

91 Connector/angled socket

Other cable lengths on request.

Description	ID	Length
		[m]
Angled cable connector, robot-side		
KAS-19B-K-90-C	0301294	
Angled cable connector, tool-side		
KAS-19B-A-90-C	0301295	
Angled cable connector with cable, robot-side		
KA BW19B-L 19P-0300	0302179	3
KA BW19B-L 19P-0500	0302190	5
Angled cable connector with cable, tool-side		
KA SW19B-L 19P-0300	0302191	3
Straight cable connector, robot-side		
KAS-19B-K-0-C	0301283	
Straight cable connector, tool-side		
KAS-19B-A-0-C	0301284	
Straight cable connector with cable, robot-side		
KA BG19B-L 19P-0300	0302176	3
KA BG19B-L 19P-0500	0302177	5
Straight cable connector with cable, tool-side		
KA SG19B-L 19P-0300	0302178	3

ⓘ Detailed information and further cable connectors can be found at schunk.com

COS G26

Feed-through modules

Technical data

Description		COS G26-K	COS G26R-K	COS G26W-K	COS G26-A	COS G21-A
ID		1586550	1586551	1586552	1586549	1586548
Suitable on		Change head	Change head	Change head	Tool	Tool
Screw connection diagram		J	J	J	J	J
Transmission type		Signal	Signal	Signal	Signal	Signal
Weight	[kg]	0.14	0.2	0.2	0.12	0.16
Min./max. ambient temperature	[°C]	5/60	5/60	5/60	5/60	5/60
Protection class IP		IP64 (only in a coupled state)	IP64 (only in a coupled state)	IP64 (only in a coupled state)	IP64 (only in a coupled state)	IP64 (only in a coupled state)
Number of pin contacts		26	22	22	26	21
Nominal current	[A]	3	3	3	3	3
Alternating voltage	[V AC]	250	250	250	250	250
Direct voltage	[V DC]	250	250	250	250	250
Electrical connection		Amphenol PT bayonet lock socket, 26 pins	Amphenol PT bayonet lock socket, 26 pins	Amphenol PT bayonet lock socket, 26 pins	Amphenol PT bayonet lock socket, 26 pins	Amphenol PT bayonet lock socket, 26 pins
Outlet connection		Can be radially swiveled	Can be radially swiveled	Can be radially swiveled	Can be radially swiveled	Can be radially swiveled
Special properties		Can swivel in five positions	Can swivel in five positions, two integrated cables with right-angled M8 socket (A-coded, 3-pin), for connection of the locking and unlocking sensor.	Can swivel in five positions, two integrated cables with straight M8 socket (A-coded, 3-pin), for connection of the locking and unlocking sensor.	Can swivel in five positions	Can be swiveled in five positions, rotary encoder switch for tool coding for 0-15 tools. Designed for max. 0.15 A and 24 V.

Combination COS G26-K and COS G26-A

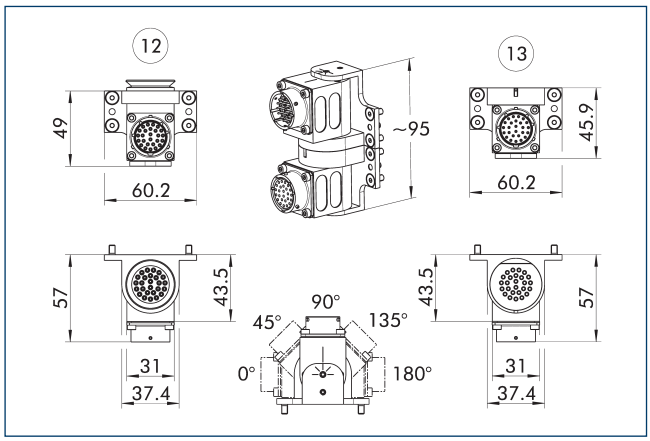

12 Master side
13 Adapter side

Combination possibilities G26

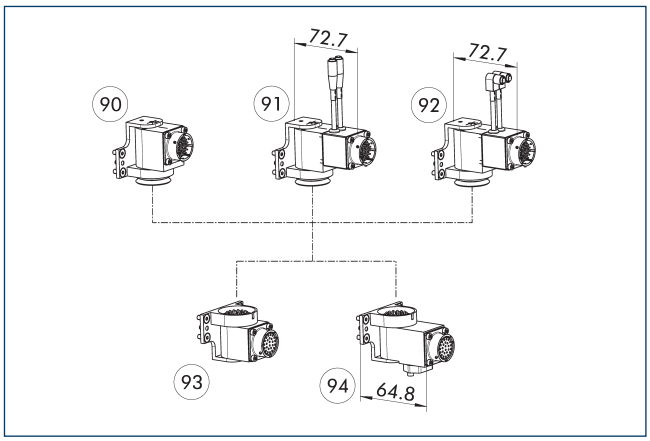

90 COS G26-K
91 COS G26W-K
92 COS G26R-K
93 COS G26-A
94 COS G21-A

Pin assignment for COS G26R-K and COS G26-A

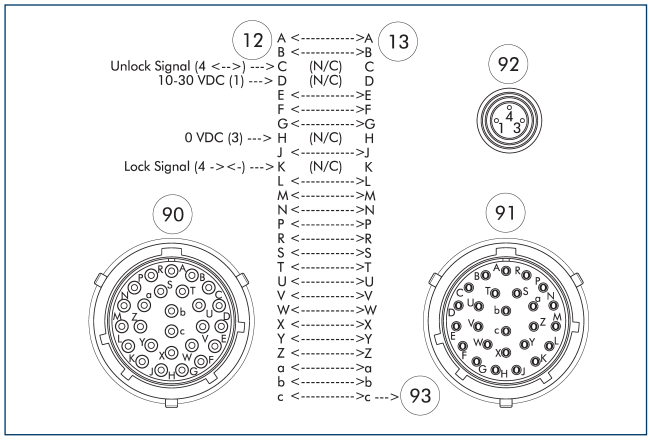

12 Master side
13 Adapter side
90 Amphenol PT bayonet lock connector, 26 pins
91 Amphenol PT bayonet lock socket, 26 pins
92 M8 socket, A-coded, 3-pin
93 leading pin

Pin assignment for COS G26W-K and COS G26-A

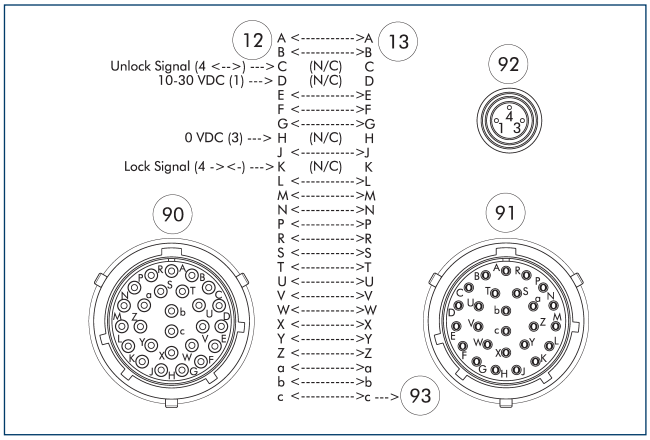

12 Master side
13 Adapter side
90 Amphenol PT bayonet lock connector, 26 pins
91 Amphenol PT bayonet lock socket, 26 pins
92 M8 socket, A-coded, 3-pin
93 leading pin

Pin assignment for COS G26-K and COS G21-A

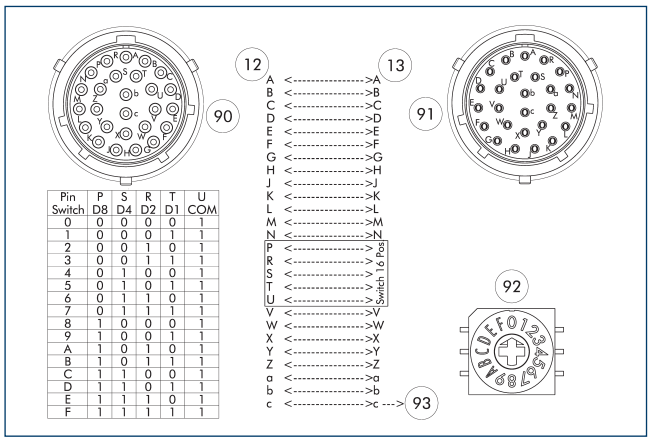

Pin Switch	P D8	S D4	R D2	T D1	U COM
0	0	0	0	0	1
1	0	0	0	1	1
2	0	0	1	0	1
3	0	0	1	1	1
4	0	1	0	0	1
5	0	1	0	1	1
6	0	1	1	0	1
7	0	1	1	1	1
8	1	0	0	0	1
9	1	0	0	1	1
A	1	0	1	0	1
B	1	0	1	1	1
C	1	1	0	0	1
D	1	1	0	1	1
E	1	1	1	0	1
F	1	1	1	1	1

(12) Master side
(13) Adapter side
(90) Amphenol PT bayonet lock connector, 26 pins
(91) Amphenol PT bayonet lock socket, 26 pins
(92) Rotary encoder switch for tool coding of 0-15 tools.
(93) leading pin

Pin assignment for COS G26-K and COS G26-A

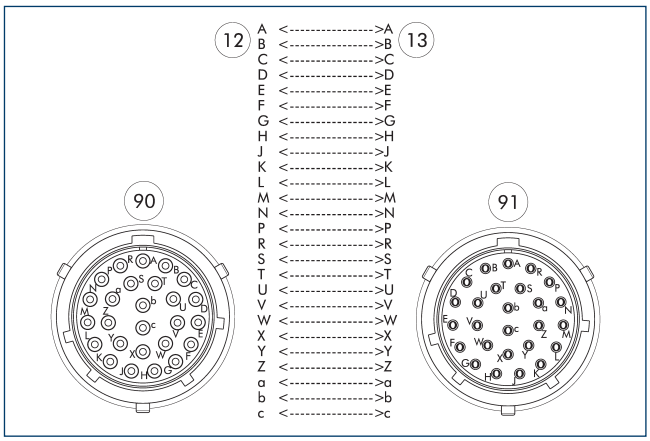

(12) Master side
(13) Adapter side
(90) Amphenol PT bayonet lock connector, 26 pins
(91) Amphenol PT bayonet lock socket, 26 pins

Cover COS JPC-A

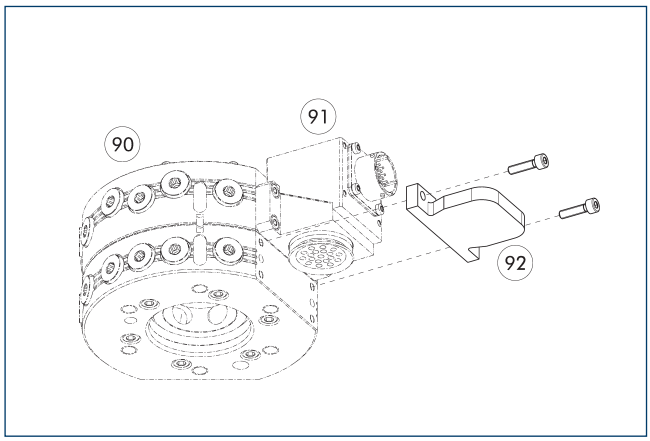

(90) Automatic tool changers CPS
(91) Optional module COS master
(92) Cover COS JPC-A

Description	ID	Suitable for
Cover		
COS JPC-A	1584095	For many electrical modules with screw-on pattern J

Cable plug/cable extension

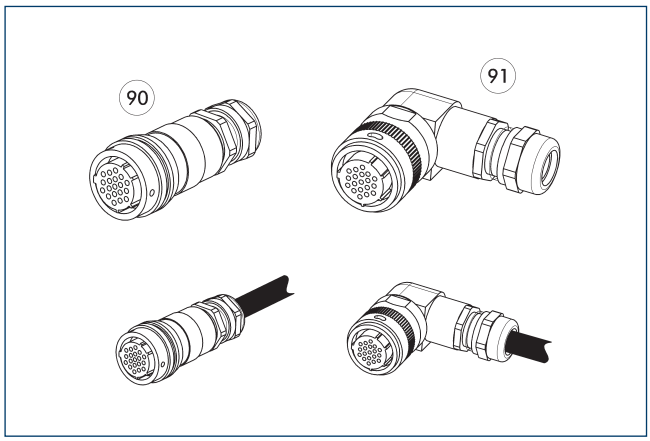

90 Plug/socket straight

91 Connector/angled socket

Other cable lengths on request.

Description	ID	Length
		[m]
Angled cable connector, robot-side		
KAS-26B-K-90-C	0301296	
Angled cable connector, tool-side		
KAS-26B-A-90-C	0301297	
Angled cable connector with cable, robot-side		
KA BW26B-L 26P-0300	0302185	3
KA BW26B-L 26P-0500	0302186	5
Angled cable connector with cable, tool-side		
KA SW26B-L 26P-0300	0302187	3
Straight cable connector, robot-side		
KAS-26B-K-0-C	0301290	
Straight cable connector, tool-side		
KAS-26B-A-0-C	0301291	
Straight cable connector with cable, robot-side		
KA BG26B-L 26P-0300	0302192	3
KA BG26B-L 26P-0500	0302193	5
Straight cable connector with cable, tool-side		
KA SG26B-L 26P-0300	0302184	3

ⓘ Detailed information and further cable connectors can be found at schunk.com

COS GD4

Feed-through modules

Technical data

Description		COS GD4-K	COS GD4-A
ID		1586557	1586556
Suitable on		Change head	Tool
Screw connection diagram		J	J
Transmission type		Signal	Signal
Weight	[kg]	0.14	0.12
Min./max. ambient temperature	[°C]	5/60	5/60
Protection class IP		IP64 (only in a coupled state)	IP64 (only in a coupled state)
Number of pin contacts		4	4
Nominal current	[A]	2	2
Alternating voltage	[V AC]	48	48
Direct voltage	[V DC]	48	48
Electrical connection		M12 connector, A-coded, 4-pin	M12 socket, A-coded, 4-pin
Outlet connection		Can be radially swiveled	Can be radially swiveled
Special properties		Can swivel in five positions	Can swivel in five positions

Combination COS GD4-K and COS GD4-A

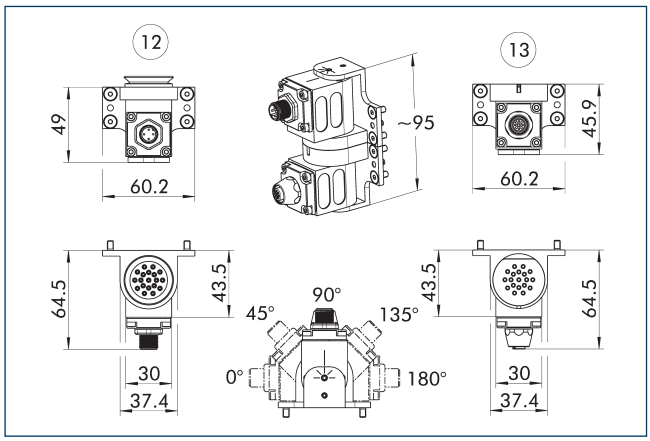

12 Master side
13 Adapter side

Pin assignment for COS GD4-K and COS GD4-A

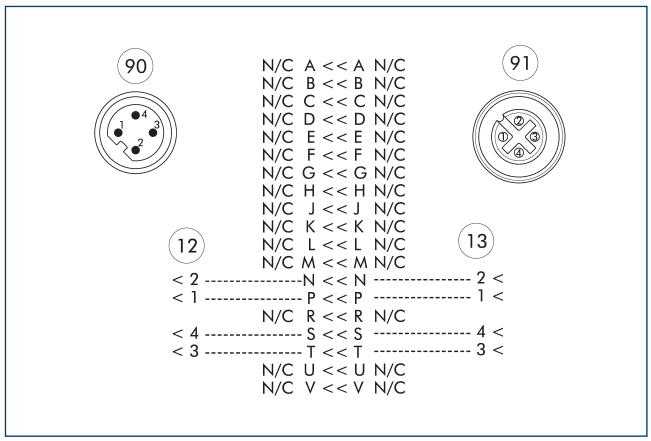

12 Master side
13 Adapter side
90 M12 connector, A-coded, 4-pin
91 M12 socket, A-coded, 4-pin

Cover COS JPC-A

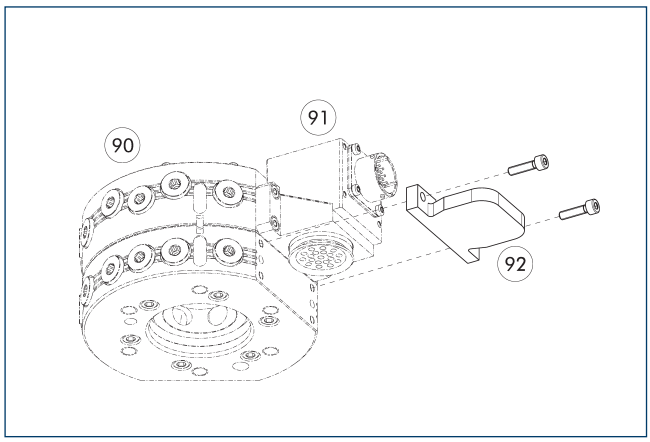

90 Automatic tool changers CPS
91 Optional module COS master
92 Cover COS JPC-A

Description	ID	Suitable for
Cover		
COS JPC-A	1584095	For many electrical modules with screw-on pattern J

COS GF19

Feed-through modules

Technical data

Description		COS GF19-K	COS GF19W-K	COS GF19-A	COS GF14-A
ID		1586570	1586572	1586559	1586558
Suitable on		Change head	Change head	Tool	Tool
Screw connection diagram		J	J	J	J
Transmission type		Signal	Signal	Signal	Signal
Weight	[kg]	0.13	0.17	0.12	0.14
Min./max. ambient temperature	[°C]	5/60	5/60	5/60	5/60
Protection class IP		IP64 (only in a coupled state)	IP64 (only in a coupled state)	IP64 (only in a coupled state)	IP64 (only in a coupled state)
Number of pin contacts		19	15	19	14
Nominal current	[A]	3	3	3	3
Alternating voltage	[V AC]	30	30	30	30
Direct voltage	[V DC]	30	30	30	30
Electrical connection		M16 connector, 19-pin	M16 connector, 19-pin	M16 socket, 19-pin	M16 socket, 19-pin
Outlet connection		Can be radially swiveled	Can be radially swiveled	Can be radially swiveled	Can be radially swiveled
Special properties		Can swivel in five positions	Can swivel in five positions, two integrated cables with straight M8 socket (A-coded, 3-pin), for connection of the locking and unlocking sensor.	Can swivel in five positions	Can be swiveled in five positions, rotary encoder switch for tool coding for 0-15 tools. Designed for max. 0.15 A and 24 V.

Combination COS GF19-K and COS GF19-A

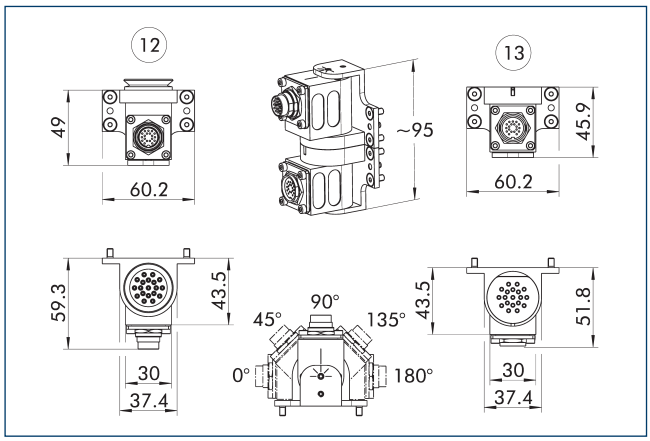

12 Master side
13 Adapter side

Combination possibilities GF19

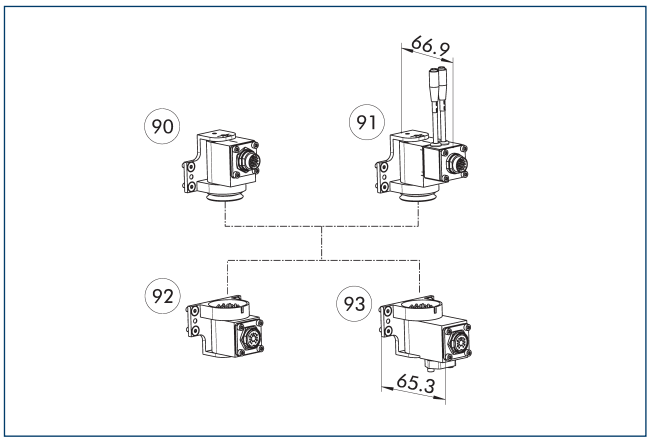

90 COS GF19-K
91 COS GF19W-K
92 COS GF19-A
93 COS GF14-A

Pin assignment for COS GF19-K and COS GF19-A

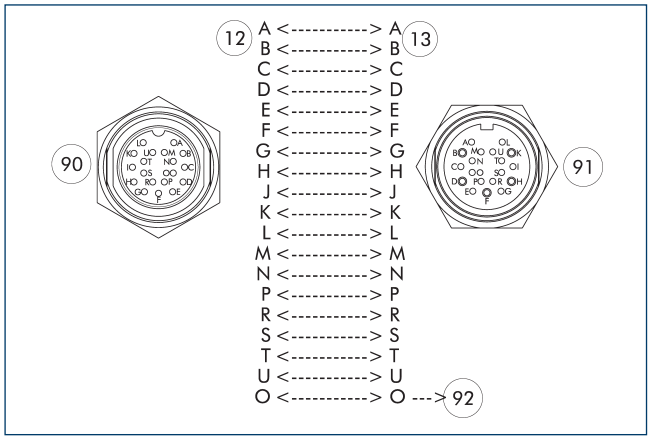

12 Master side
13 Adapter side
90 M16 connector, 19-pin
91 M16 socket, 19-pin
92 leading pin

Pin assignment for COS GF19-K and COS GF14-A

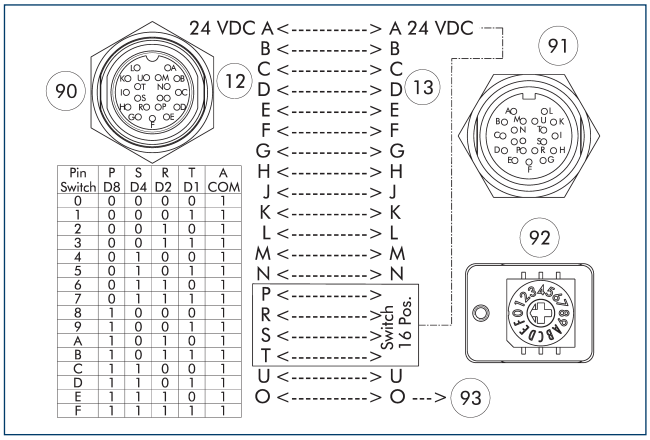

Pin Switch	P D8	S D4	R D2	T D1	A COM
0	0	0	0	0	1
1	0	0	0	1	1
2	0	0	1	0	1
3	0	0	1	1	1
4	0	1	0	0	1
5	0	1	0	1	1
6	0	1	1	0	1
7	0	1	1	1	1
8	1	0	0	0	1
9	1	0	0	1	1
A	1	0	1	0	1
B	1	0	1	1	1
C	1	1	0	0	1
D	1	1	0	1	1
E	1	1	1	0	1
F	1	1	1	1	1

12 Master side
13 Adapter side
90 M16 connector, 19-pin
91 M16 socket, 19-pin
92 Rotary encoder switch for tool coding of 0-15 tools.
93 leading pin

Pin assignment for COS GF19W-K and COS GF19-A

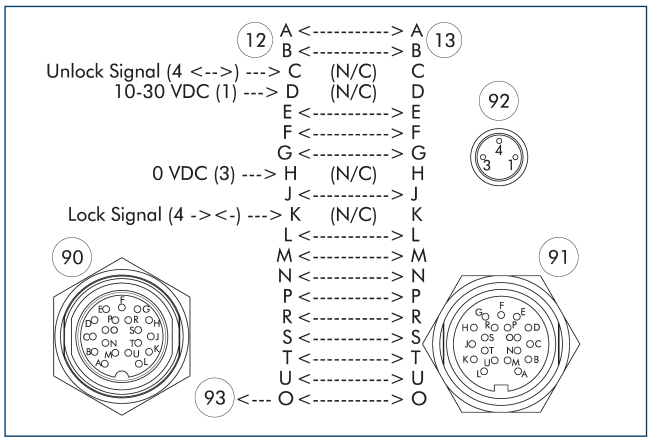

12 Master side
13 Adapter side
90 M16 connector, 19-pin
91 M16 socket, 19-pin
92 M8 socket, A-coded, 3-pin
93 leading pin

Cover COS JPC-A

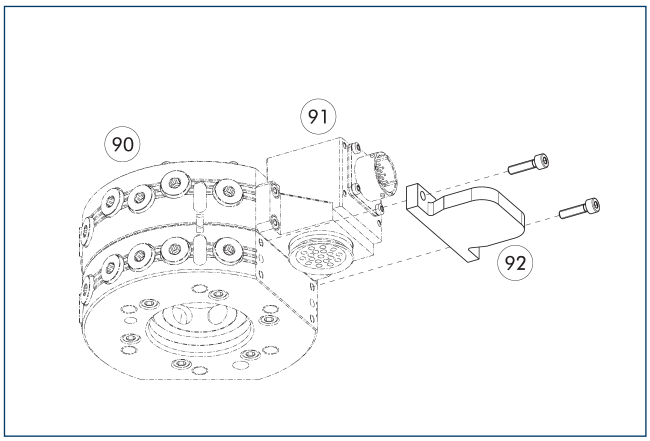

90 Automatic tool changers CPS
91 Optional module COS master
92 Cover COS JPC-A

Description	ID	Suitable for
Cover		
COS JPC-A	1584095	For many electrical modules with screw-on pattern J

Cable plug/cable extension

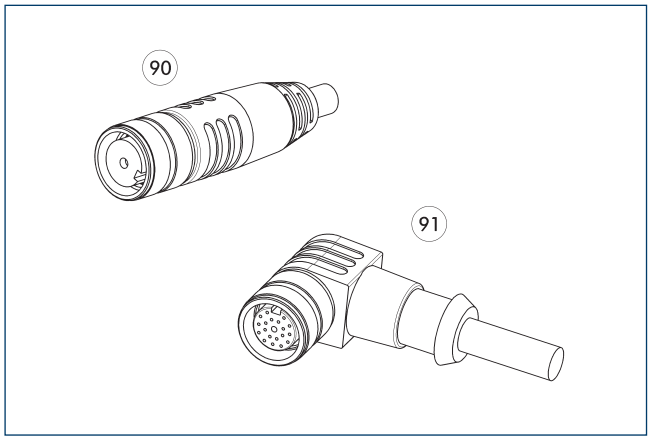

90 Connector/straight socket with extension cable
91 Connector/angled socket with extension cable

Description	ID	Length
		[m]
Angled cable connector with cable, robot-side		
KA BW19F-L 19P-0500	0302172	5
KA BW19F-L 19P-1000	0302173	10
Angled cable connector with cable, tool-side		
KA SW19F-L 19P-0300	0302175	3
Straight cable connector with cable, robot-side		
KA BG19F-L 19P-0500	0302170	5
KA BG19F-L 19P-1000	0302171	10
Straight cable connector with cable, tool-side		
KA SG19F-L 19P-0300	0302174	3

ⓘ Detailed information and further cable connectors can be found at schunk.com

COS K19

Feed-through modules

Technical data

Description		COS K19-K	COS K19P-K	COS K19W-K	COS K19-KIT-K	COS K19-A	COS K19-KIT-A
ID		1586384	1586389	1586394	1586387	1586381	1586386
Suitable on		Change head	Change head	Change head	Change head	Tool	Tool
Screw connection diagram		K	K	K	K	K	K
Transmission type		Signal	Signal	Signal	Signal	Signal	Signal
Weight	[kg]	0.1	0.12	0.11	0.1	0.11	0.11
Min./max. ambient temperature	[°C]	5/60	5/60	5/60	5/60	5/60	5/60
Protection class IP		IP64 (only in a coupled state)	IP64 (only in a coupled state)	IP64 (only in a coupled state)	IP64 (only in a coupled state)	IP64 (only in a coupled state)	IP64 (only in a coupled state)
Number of pin contacts		19	15	15	19	19	19
Nominal current	[A]	3	3	3	3	3	3
Alternating voltage	[V AC]	50	50	50	250	50	250
Direct voltage	[V DC]	50	50	50	250	50	250
Electrical connection		Amphenol PT bayonet lock connector, 19 pins	Amphenol PT bayonet lock connector, 19 pins	Amphenol PT bayonet lock connector, 19 pins		Amphenol PT bayonet lock socket, 19 pins	
Outlet connection		radial	radial	radial		radial	
Electrical connection					M16 cable gland for Ø 5 – 10 mm		M16 cable gland for Ø 5 – 10 mm
Special properties			Two sockets (A-coded, 3-pin) integrated in the module housing for connection of locking and unlocking sensor.	Two integrated cables with straight M8 socket (A-coded, 3-pin), for connection of the locking and unlocking sensor.	The KIT has an additional attachment with various outlet options. Direct soldering of the cable strands to the pin block.		The KIT has an additional attachment with various outlet options. Direct soldering of the cable strands to the pin block.

Description		COS K14-A
ID		1586379
Suitable on		Tool
Screw connection diagram		K
Transmission type		Signal
Weight	[kg]	0.11
Min./max. ambient temperature	[°C]	5/60
Protection class IP		IP64 (only in a coupled state)
Number of pin contacts		14
Nominal current	[A]	3
Alternating voltage	[V AC]	50
Direct voltage	[V DC]	50
Electrical connection		Amphenol PT bayonet lock socket, 19 pins
Outlet connection		radial
Special properties		Rotary encoder switch for tool coding of 0 – 15 tools. Designed for max. 0.15 A and 24 V.

Combination COS K19-K and COS K19-A

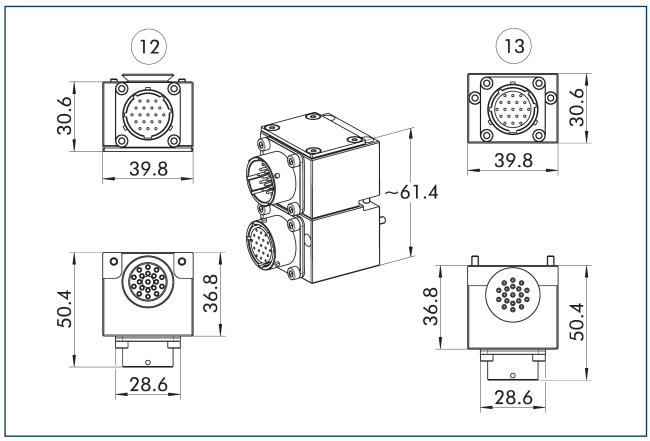

12 Master side

13 Adapter side

Combination COS K19-Kit-K and COS K19-Kit-A

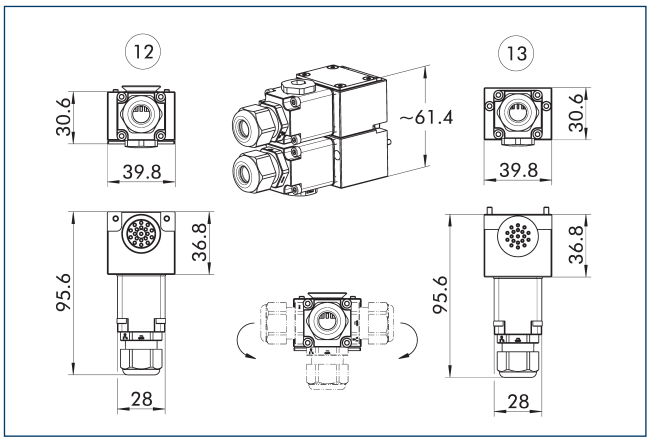

12 Master side

13 Adapter side

Combination possibilities K19

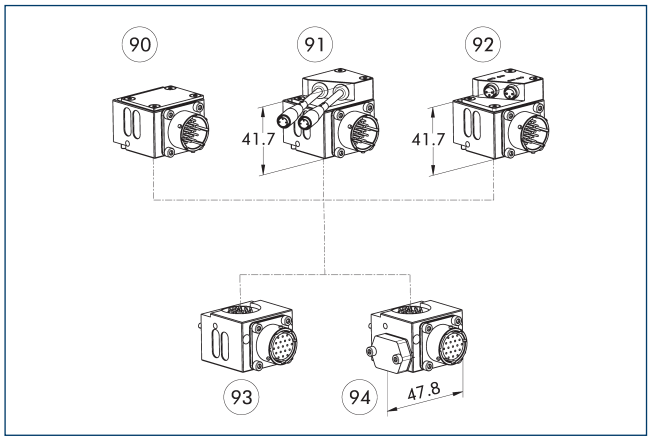

90 COS K19-K

91 COS K19W-K

92 COS K19P-K

93 COS K19-A

94 COS K14-A

Pin assignment for COS K19-K and COS K14-A

Pin Switch	P D8	S D4	R D2	T D1	U COM
0	0	0	0	0	1
1	0	0	0	1	1
2	0	0	1	0	1
3	0	0	1	1	1
4	0	1	0	0	1
5	0	1	0	1	1
6	0	1	1	0	1
7	0	1	1	1	1
8	1	0	0	0	1
9	1	0	0	1	1
A	1	0	1	0	1
B	1	0	1	1	1
C	1	1	0	0	1
D	1	1	0	1	1
E	1	1	1	0	1
F	1	1	1	1	1

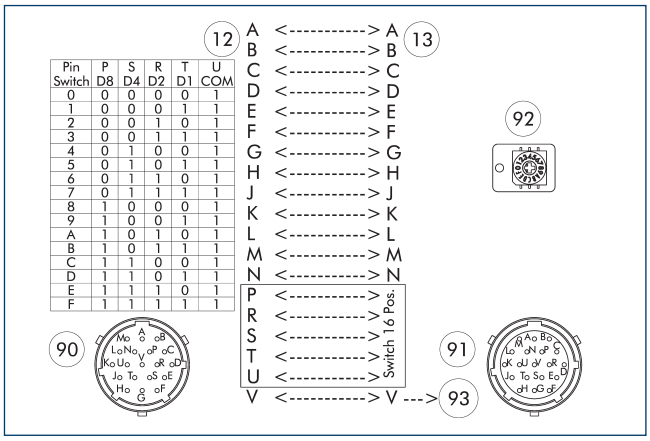

12 Master side

13 Adapter side

90 Amphenol PT bayonet lock connector, 19 pins

91 Amphenol PT bayonet lock socket, 19 pins

92 Rotary encoder switch for tool coding of 0-15 tools.

93 leading pin

Pin assignment for COS K19-K and COS K19-A

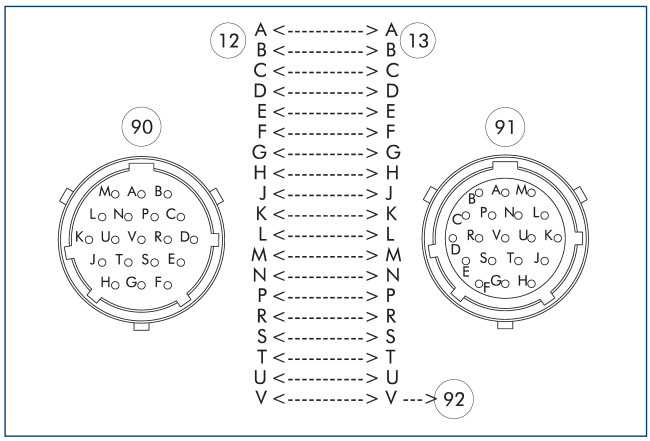

(12) Master side
(13) Adapter side
(90) Amphenol PT bayonet lock connector, 19 pins
(91) Amphenol PT bayonet lock socket, 19 pins
(92) leading pin

Pin assignment for COS K19W-K and COS K19-A

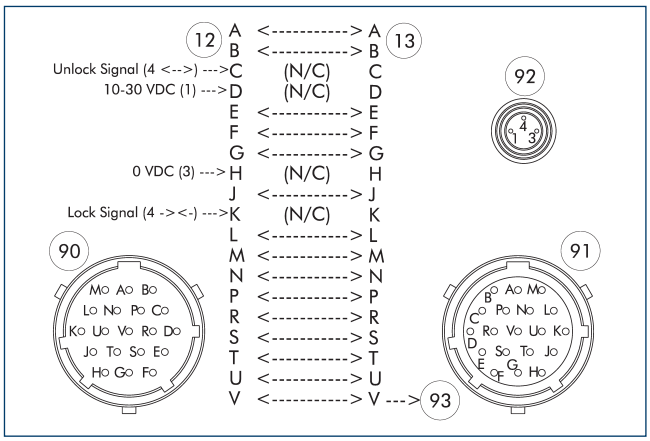

(12) Master side
(13) Adapter side
(90) Amphenol PT bayonet lock connector, 19 pins
(91) Amphenol PT bayonet lock socket, 19 pins
(92) M8 socket, A-coded, 3-pin
(93) leading pin

Cover COS KPC-A

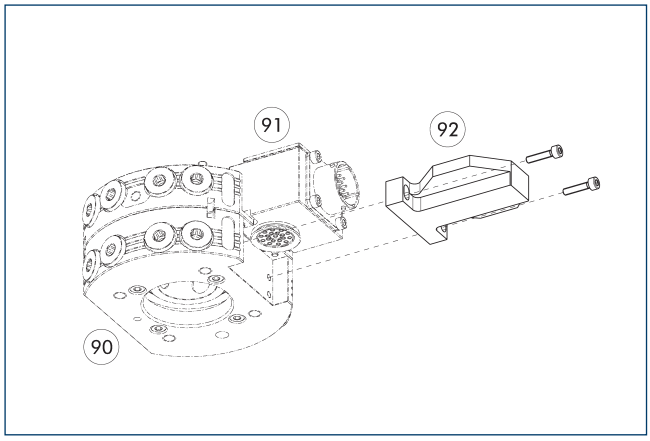

(90) Automatic tool changers CPS
(91) Optional module COS master
(92) Cover COS KPC-A

Description	ID	Suitable for
Cover		
COS KPC-A	1585142	Many electrical modules with screw-on pattern K

Cable plug/cable extension

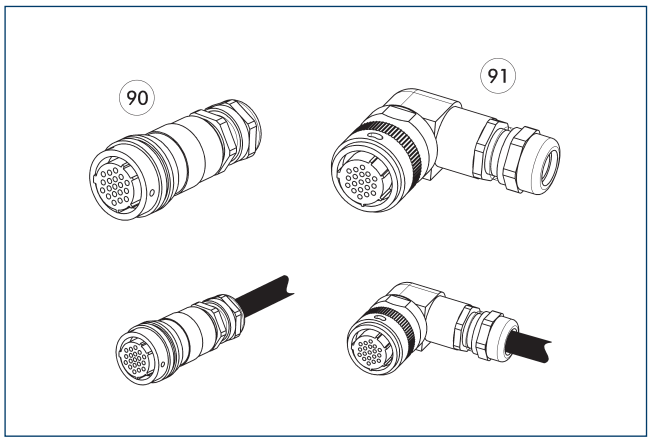

90 Plug/socket straight

91 Connector/angled socket

Other cable lengths on request.

Description	ID	Length
		[m]
Angled cable connector, robot-side		
KAS-19B-K-90-C	0301294	
Angled cable connector, tool-side		
KAS-19B-A-90-C	0301295	
Angled cable connector with cable, robot-side		
KA BW19B-L 19P-0300	0302179	3
KA BW19B-L 19P-0500	0302190	5
Angled cable connector with cable, tool-side		
KA SW19B-L 19P-0300	0302191	3
Straight cable connector, robot-side		
KAS-19B-K-0-C	0301283	
Straight cable connector, tool-side		
KAS-19B-A-0-C	0301284	
Straight cable connector with cable, robot-side		
KA BG19B-L 19P-0300	0302176	3
KA BG19B-L 19P-0500	0302177	5
Straight cable connector with cable, tool-side		
KA SG19B-L 19P-0300	0302178	3

ⓘ Detailed information and further cable connectors can be found at schunk.com

COS K26

Feed-through modules

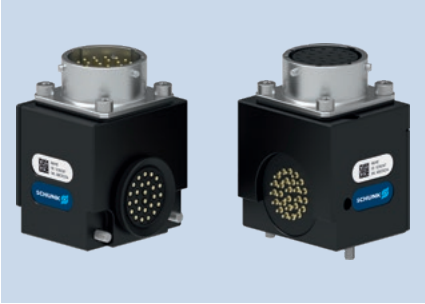

Technical data

Description		COS K26-K	COS K26P-K	COS K26-A	COS K21-A
ID		1586398	1586410	1586397	1586395
Suitable on		Change head	Change head	Tool	Tool
Screw connection diagram		K	K	K	K
Transmission type		Signal	Signal	Signal	Signal
Weight	[kg]	0.1	0.13	0.11	0.11
Min./max. ambient temperature	[°C]	5/60	5/60	5/60	5/60
Protection class IP		IP64 (only in a coupled state)	IP64 (only in a coupled state)	IP64 (only in a coupled state)	IP64 (only in a coupled state)
Number of pin contacts		26	22	26	21
Nominal current	[A]	3	3	3	3
Alternating voltage	[V AC]	50	50	50	50
Direct voltage	[V DC]	50	50	50	50
Electrical connection		Amphenol PT bayonet lock connector, 26 pins	Amphenol PT bayonet lock connector, 26 pins	Amphenol PT bayonet lock socket, 26 pins	Amphenol PT bayonet lock socket, 26 pins
Outlet connection		radial	radial	radial	radial
Special properties			Two sockets (A-coded, 3-pin) integrated in the module housing for connection of locking and unlocking sensor.		Rotary encoder switch for tool coding of 0 – 15 tools. Designed for max. 0.15 A and 24 V.

Combination COS K26-K and COS K26-A

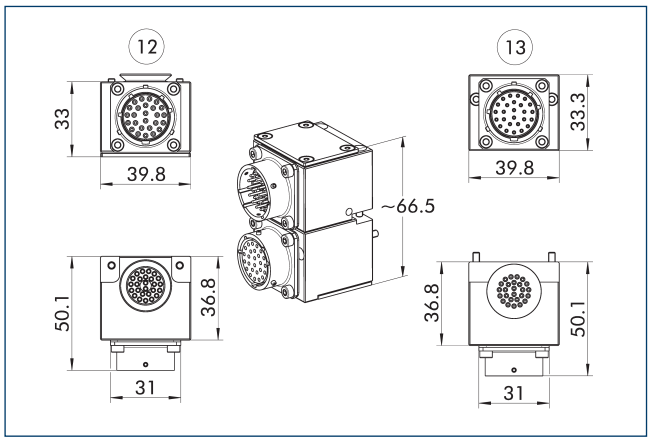

12 Master side
13 Adapter side

Combination possibilities K26

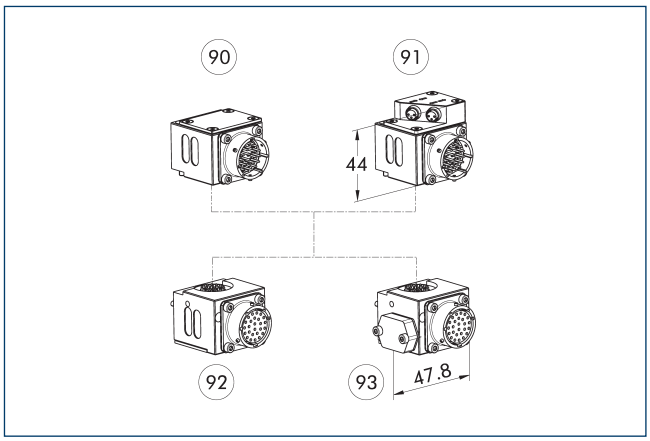

90 COS K26-K
91 COS K26P-K
92 COS K26-A
93 COS K21-A

Pin assignment for COS K26P-K and COS K26-A

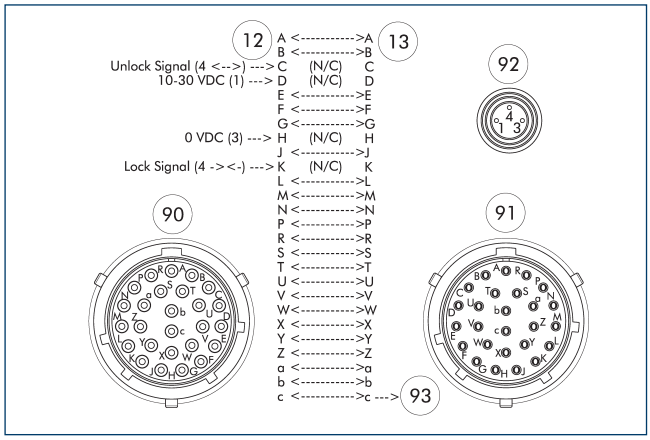

12 Master side
13 Adapter side
90 Amphenol PT bayonet lock connector, 26 pins
91 Amphenol PT bayonet lock socket, 26 pins
92 M8 socket, A-coded, 3-pin
93 leading pin

Pin assignment for COS K26-K and COS K21-A

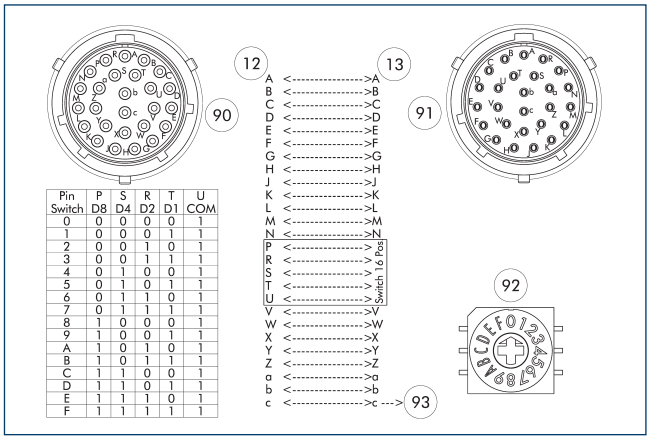

Pin Switch	P D8	S D4	R D2	T D1	U COM
0	0	0	0	0	1
1	0	0	0	1	1
2	0	0	1	0	1
3	0	0	1	1	1
4	0	1	0	0	1
5	0	1	0	1	1
6	0	1	1	0	1
7	0	1	1	1	1
8	1	0	0	0	1
9	1	0	0	1	1
A	1	0	1	0	1
B	1	0	1	1	1
C	1	1	0	0	1
D	1	1	0	1	1
E	1	1	1	0	1
F	1	1	1	1	1

12 Master side
13 Adapter side
90 Amphenol PT bayonet lock connector, 26 pins
91 Amphenol PT bayonet lock socket, 26 pins
92 Rotary encoder switch for tool coding of 0-15 tools.
93 leading pin

Pin assignment for COS K26-K with COS K26-A

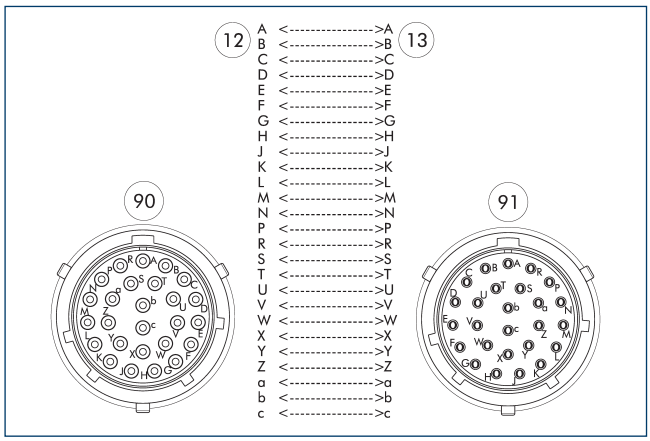

(12) Master side
(13) Adapter side
(90) Amphenol PT bayonet lock connector, 26 pins
(91) Amphenol PT bayonet lock socket, 26 pins

Cover COS KPC-A

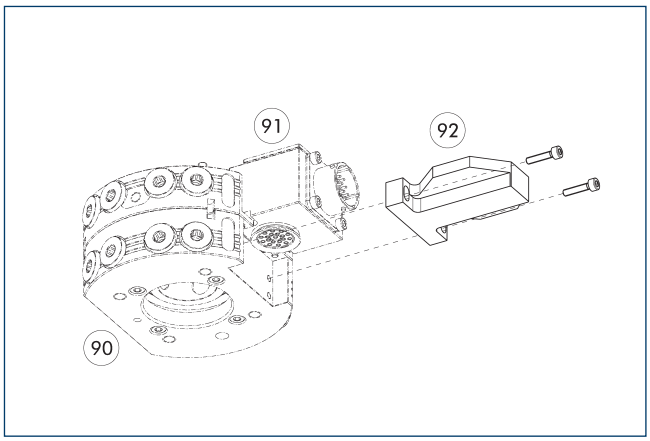

(90) Automatic tool changers CPS
(91) Optional module COS master
(92) Cover COS KPC-A

Description	ID	Suitable for
Cover		
COS KPC-A	1585142	Many electrical modules with screw-on pattern K

Cable plug/cable extension

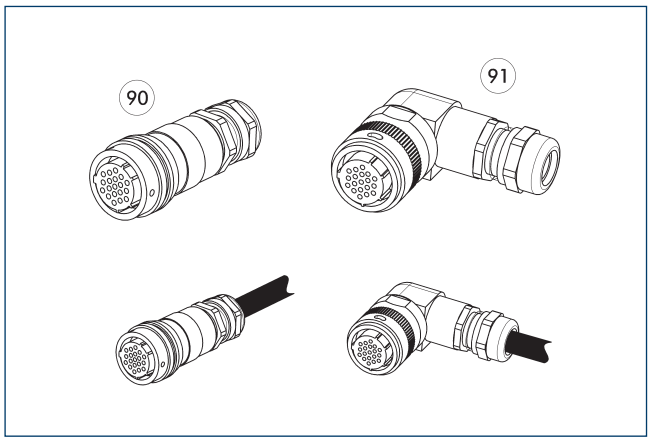

90 Plug/socket straight

91 Connector/angled socket

Other cable lengths on request.

Description	ID	Length
		[m]
Angled cable connector, robot-side		
KAS-26B-K-90-C	0301296	
Angled cable connector, tool-side		
KAS-26B-A-90-C	0301297	
Angled cable connector with cable, robot-side		
KA BW26B-L 26P-0300	0302185	3
KA BW26B-L 26P-0500	0302186	5
Angled cable connector with cable, tool-side		
KA SW26B-L 26P-0300	0302187	3
Straight cable connector, robot-side		
KAS-26B-K-0-C	0301290	
Straight cable connector, tool-side		
KAS-26B-A-0-C	0301291	
Straight cable connector with cable, robot-side		
KA BG26B-L 26P-0300	0302192	3
KA BG26B-L 26P-0500	0302193	5
Straight cable connector with cable, tool-side		
KA SG26B-L 26P-0300	0302184	3

ⓘ Detailed information and further cable connectors can be found at schunk.com

COS KF19

Feed-through modules

Technical data

Description		COS KF19-K	COS KF19P-K	COS KF19-A	COS KF14-A
ID		1586452	1586453	1586451	1586429
Suitable on		Change head	Change head	Tool	Tool
Screw connection diagram		K	K	K	K
Transmission type		Signal	Signal	Signal	Signal
Weight	[kg]	0.1	0.12	0.11	0.11
Min./max. ambient temperature	[°C]	5/60	5/60	5/60	5/60
Protection class IP		IP64 (only in a coupled state)	IP64 (only in a coupled state)	IP64 (only in a coupled state)	IP64 (only in a coupled state)
Number of pin contacts		19	15	19	14
Nominal current	[A]	3	3	3	3
Alternating voltage	[V AC]	30	30	30	30
Direct voltage	[V DC]	30	30	30	30
Electrical connection		M16 connector, 19-pin	M16 connector, 19-pin	M16 socket, 19-pin	M16 socket, 19-pin
Outlet connection		radial	radial	radial	radial
Special properties			Two sockets (A-coded, 3-pin) integrated in the module housing for connection of locking and unlocking sensor.		Rotary encoder switch for tool coding of 0 – 15 tools. Designed for max. 0.15 A and 24 V.

Combination COS KF19-K and COS KF19-A

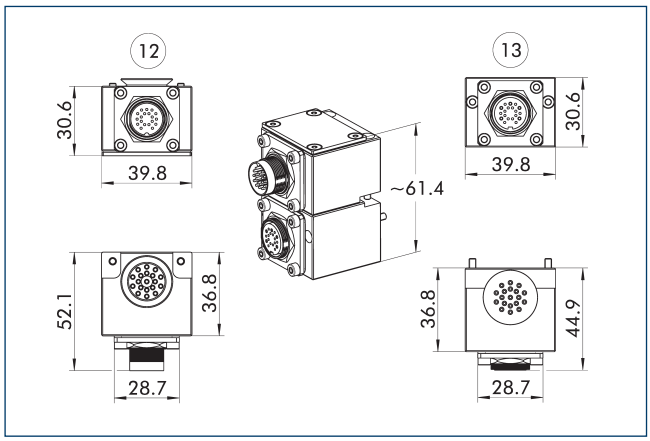

(12) Master side
(13) Adapter side

Combination possibilities KF19

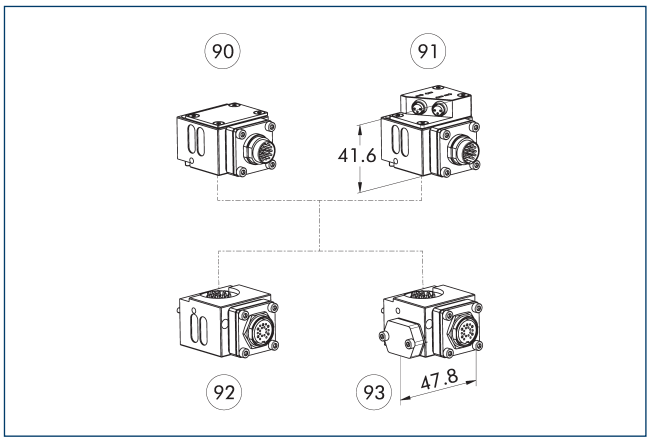

(90) COS KF19-K
(91) COS KF19P-K
(92) COS KF19-A
(93) COS KF14-A

Pin assignment for COS KF19-K and COS KF19-A

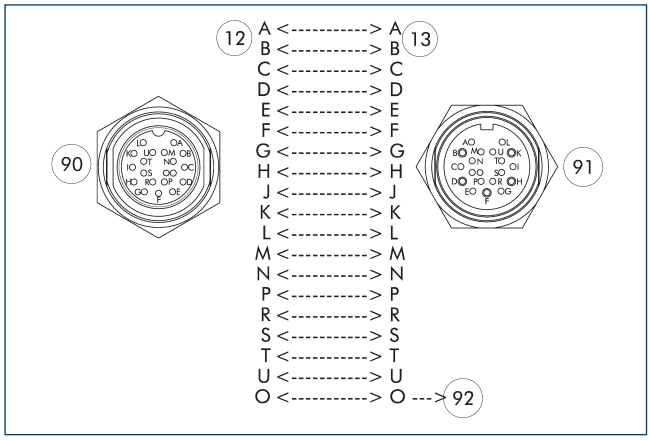

(12) Master side
(13) Adapter side
(90) M16 socket, 19-pin
(91) M16 socket, 19-pin
(92) leading pin

Pin assignment for COS KF19P-K and COS KF19-A

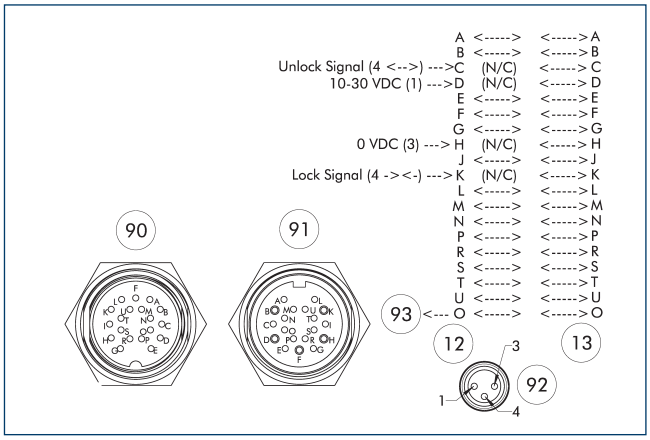

(12) Master side
(13) Adapter side
(90) M16 connector, 19-pin
(91) M16 socket, 19-pin
(92) M8 socket, A-coded, 3-pin
(93) leading pin

Pin assignment for COS KF19-K and COS KF14-A

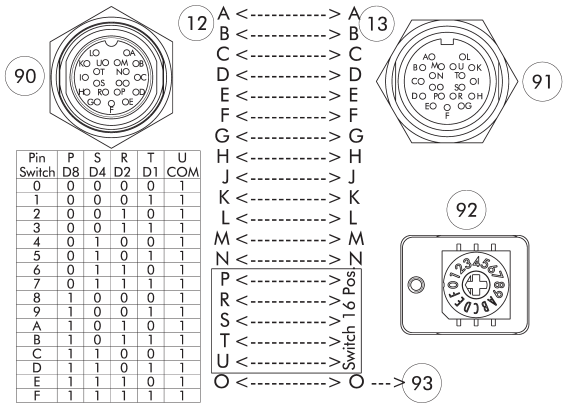

Pin Switch	P D8	S D4	R D2	T D1	U COM
0	0	0	0	0	1
1	0	0	0	1	1
2	0	0	1	0	1
3	0	0	1	1	1
4	0	1	0	0	1
5	0	1	0	1	1
6	0	1	1	0	1
7	0	1	1	1	1
8	1	0	0	0	1
9	1	0	0	1	1
A	1	0	1	0	1
B	1	0	1	1	1
C	1	1	0	0	1
D	1	1	0	1	1
E	1	1	1	0	1
F	1	1	1	1	1

(12) Master side
(13) Adapter side
(90) M16 connector, 19-pin
(91) M16 socket, 19-pin
(92) Rotary encoder switch for tool coding of 0-15 tools.
(93) leading pin

Cover COS KPC-A

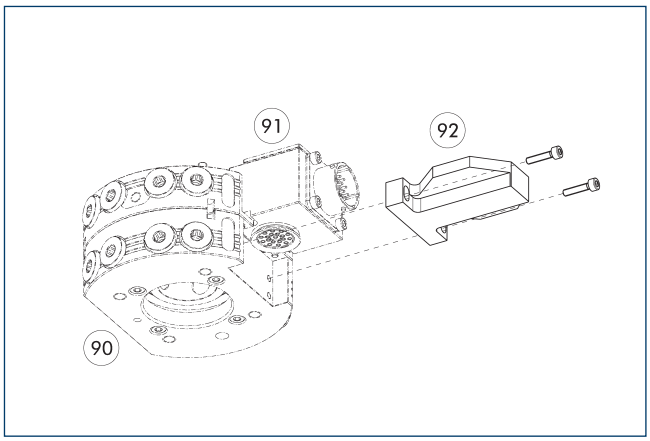

(90) Automatic tool changers CPS
(91) Optional module COS master
(92) Cover COS KPC-A

Description	ID	Suitable for
Cover		
COS KPC-A	1585142	Many electrical modules with screw-on pattern K

Cable plug/cable extension

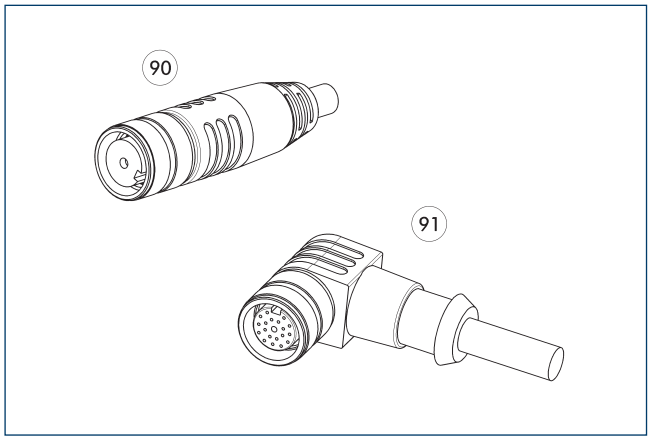

(90) Connector/straight socket with extension cable
(91) Connector/angled socket with extension cable

Description	ID	Length
		[m]
Angled cable connector with cable, robot-side		
KA BW19F-L 19P-0500	0302172	5
KA BW19F-L 19P-1000	0302173	10
Angled cable connector with cable, tool-side		
KA SW19F-L 19P-0300	0302175	3
Straight cable connector with cable, robot-side		
KA BG19F-L 19P-0500	0302170	5
KA BG19F-L 19P-1000	0302171	10
Straight cable connector with cable, tool-side		
KA SG19F-L 19P-0300	0302174	3

ⓘ Detailed information and further cable connectors can be found at schunk.com

COS R12

Feed-through modules

Technical data

Description		COS R12-K	COS R12-A
ID		1586438	1586432
Suitable on		Change head	Tool
Screw connection diagram		J	J
Transmission type		Signal	Signal
Weight	[kg]	0.11	0.1
Min./max. ambient temperature	[°C]	5/60	5/60
Protection class IP		IP64 (only in a coupled state)	IP64 (only in a coupled state)
Number of pin contacts		12	12
Nominal current	[A]	2	2
Alternating voltage	[V AC]	30	30
Direct voltage	[V DC]	30	30
Electrical connection		M12 connector, A-coded, 12-pin	M12 socket, A-coded, 12-pin
Outlet connection		radial	radial

Combination COS R12-K and COS R12-A

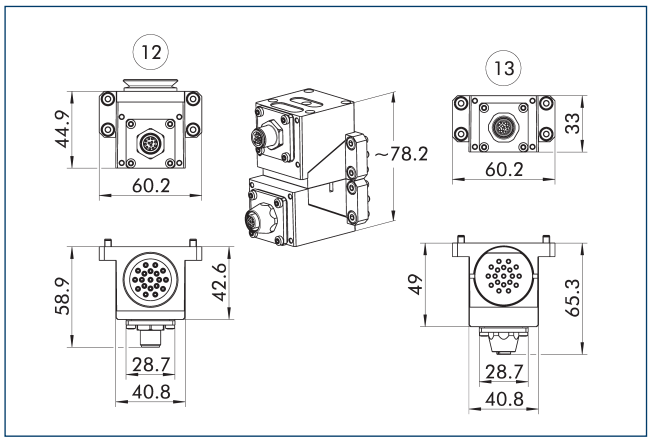

12 Master side
13 Adapter side

Pin assignment for COS R12-K with COS R12-A

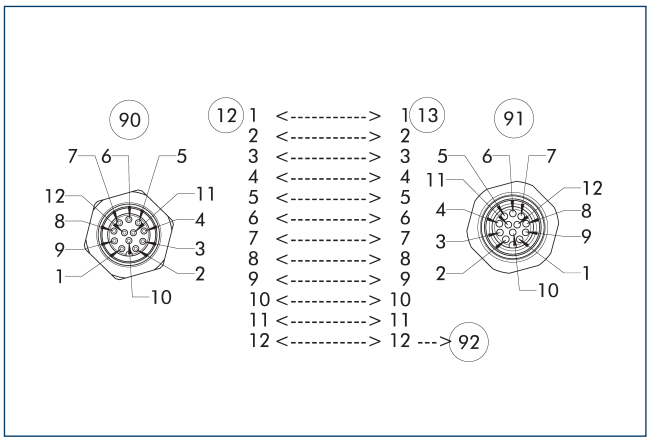

12 Master side
13 Adapter side
90 M12 connector, A-coded, 12-pin
91 M12 socket, A-coded, 12-pin
92 leading pin

Cover COS JPC-A

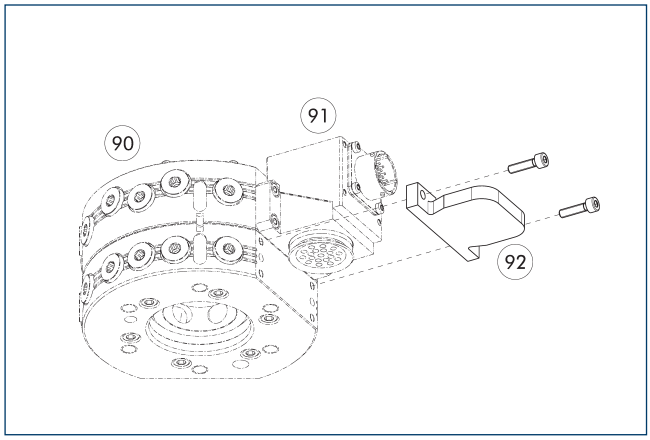

90 Automatic tool changers CPS
91 Optional module COS master
92 Cover COS JPC-A

Description	ID	Suitable for
Cover		
COS JPC-A	1584095	For many electrical modules with screw-on pattern J

Cable plug/cable extension

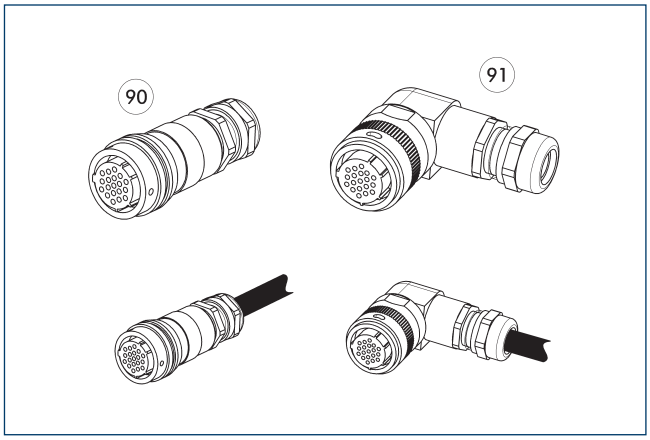

90 Plug/socket straight
91 Connector/angled socket

Other cable lengths on request.

Description	ID	
Cable extension		
KA BG12-L 12P-0500	1324328	
KA BW12-L 12P-0500	1439564	
KA SG12-L 12P-0500	1324332	
KA SW12-L 12P-0500	1439565	

COS R19

Feed-through modules

Technical data

Description		COS R19-K	COS R19R-K	COS R19W-K	COS R19-KIT-K	COS R19-A	COS R19-KIT-A
ID		1586443	1586448	1586472	1586446	1586442	1586445
Suitable on		Change head	Change head	Change head	Change head	Tool	Tool
Screw connection diagram		J	J	J	J	J	J
Transmission type		Signal	Signal	Signal	Signal	Signal	Signal
Weight	[kg]	0.11	0.12	0.12	0.2	0.1	0.14
Min./max. ambient temperature	[°C]	5/60	5/60	5/60	5/60	5/60	5/60
Protection class IP		IP64 (only in a coupled state)	IP64 (only in a coupled state)	IP64 (only in a coupled state)	IP64 (only in a coupled state)	IP64 (only in a coupled state)	IP64 (only in a coupled state)
Number of pin contacts		19	15	15	19	19	19
Nominal current	[A]	5	5	5	5	5	5
Alternating voltage	[V AC]	250	250	250	250	250	250
Direct voltage	[V DC]	250	250	250	250	250	250
Electrical connection		Amphenol PT bayonet lock connector, 19 pins	Amphenol PT bayonet lock connector, 19 pins	Amphenol PT bayonet lock connector, 19 pins		Amphenol PT bayonet lock socket, 19 pins	
Outlet connection		radial	radial	radial		radial	
Electrical connection					M16 cable gland for Ø 5 – 10 mm		M16 cable gland for Ø 5 – 10 mm
Special properties			Two integrated cables with right-angled M8 socket (A-coded, 3-pin), for connection of the locking and unlocking sensor.	Two integrated cables with straight M8 socket (A-coded, 3-pin), for connection of the locking and unlocking sensor.	The KIT has an additional attachment with various outlet options. Direct soldering of the cable strands to the pin block.		The KIT has an additional attachment with various outlet options. Direct soldering of the cable strands to the pin block.

Description		COS R14-A	COS R13-A
ID		1586440	1586407
Suitable on		Tool	Tool
Screw connection diagram		J	J
Transmission type		Signal	Signal
Weight	[kg]	0.11	0.11
Min./max. ambient temperature	[°C]	5/60	5/60
Protection class IP		IP64 (only in a coupled state)	IP64 (only in a coupled state)
Number of pin contacts		14	13
Nominal current	[A]	5	5
Alternating voltage	[V AC]	250	250
Direct voltage	[V DC]	250	250
Electrical connection		Amphenol PT bayonet lock socket, 19 pins	Amphenol PT bayonet lock socket, 19 pins
Outlet connection		radial	radial
Special properties		Rotary encoder switch for tool coding of 0 – 15 tools. Designed for max. 0.15 A and 24 V.	Rotary encoder switch for tool coding for 0-31 tools. Designed for max. 0.15 A and 24 V.

Combination COS R19-K and COS R19-A

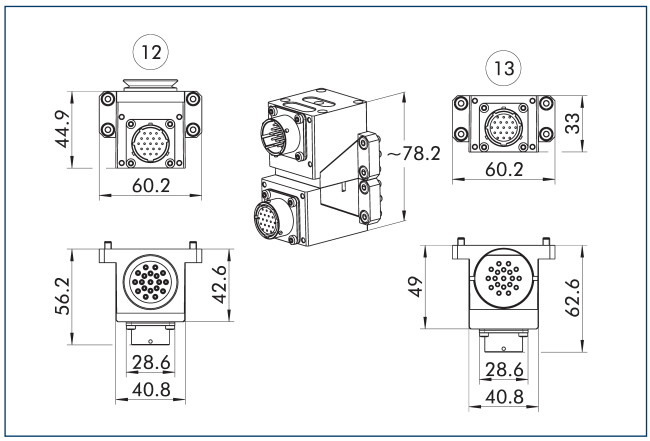

(12) Master side (13) Adapter side

Combination COS R19-Kit-K and COS R19-Kit-A

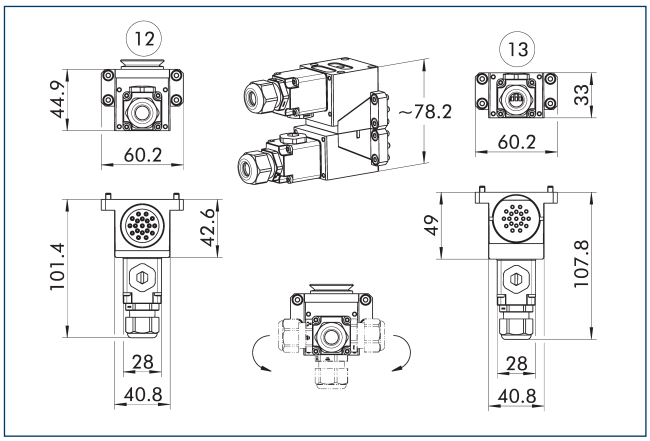

(12) Master side (13) Adapter side

Combination possibilities R19

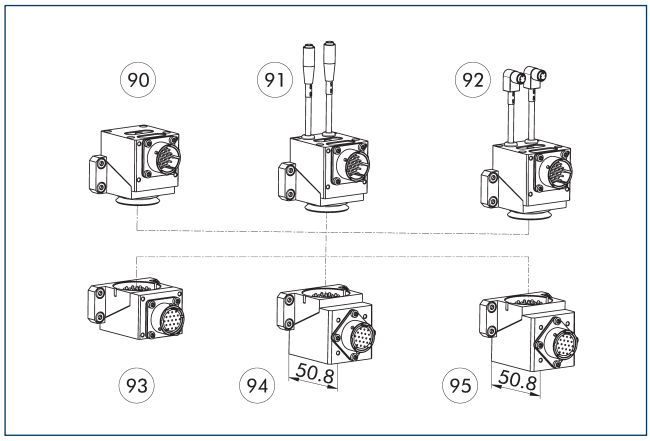

(90) COS R19-K
(91) COS R19W-K
(92) COS R19R-K
(93) COS R19-A
(94) COS R14-A
(95) COS R13-A

Pin assignment for COS R19W-K with COS R14-A

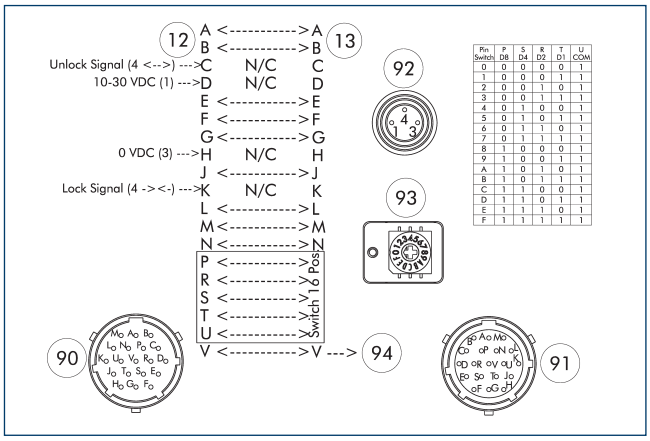

Pin Switch	P D8	S D4	R D2	T D1	U COM
0	0	0	0	0	1
1	0	0	0	1	1
2	0	0	1	0	1
3	0	0	1	1	1
4	0	1	0	0	1
5	0	1	0	1	1
6	0	1	1	0	1
7	0	1	1	1	1
8	1	0	0	0	1
9	1	0	0	1	1
A	1	0	1	0	1
B	1	0	1	1	1
C	1	1	0	0	1
D	1	1	0	1	1
E	1	1	1	0	1
F	1	1	1	1	1

(12) Master side
(13) Adapter side
(90) Amphenol PT bayonet lock connector, 19 pins
(91) Amphenol PT bayonet lock socket, 19 pins
(92) M8 socket, A-coded, 3-pin
(93) Rotary encoder switch for tool coding of 0-15 tools.
(94) leading pin

Pin assignment for COS R19W-K with COS R13-A

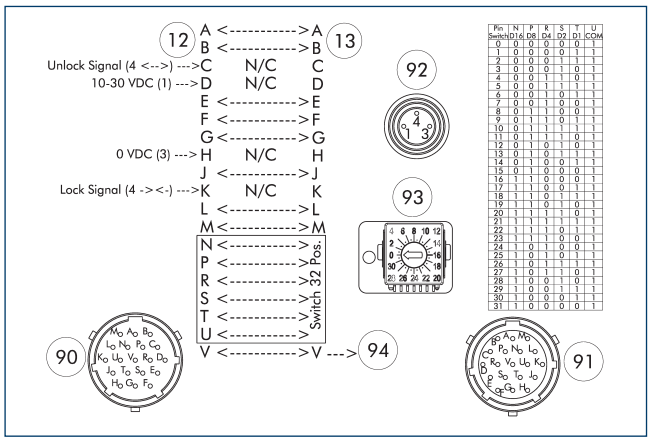

Pin Switch	N D1	P D8	R D4	S D2	T D1	U COM
0	1	0	0	0	0	1
1	0	0	0	0	1	1
2	0	0	0	1	1	1
3	0	0	0	1	0	1
4	0	0	1	1	0	1
5	0	0	1	1	1	1
6	0	0	1	0	1	1
7	0	0	1	0	0	1
8	0	1	1	0	0	1
9	0	1	1	0	1	1
10	0	1	1	1	1	1
11	0	1	1	1	0	1
12	0	1	0	1	0	1
13	0	1	0	1	1	1
14	0	1	0	0	1	1
15	0	1	0	0	0	1
16	1	1	0	0	0	1
17	1	1	0	0	1	1
18	1	1	0	1	1	1
19	1	1	0	1	0	1
20	1	1	1	1	0	1
21	1	1	1	1	1	1
22	1	1	1	0	1	1
23	1	1	1	0	0	1
24	1	0	1	0	0	1
25	1	0	1	0	1	1
26	1	0	1	1	1	1
27	1	0	1	1	0	1
28	1	0	0	1	0	1
29	1	0	0	1	1	1
30	1	0	0	0	1	1
31	1	0	0	0	0	1

(12) Master side
(13) Adapter side
(90) Amphenol PT bayonet lock connector, 19 pins
(91) Amphenol PT bayonet lock socket, 19 pins
(92) M8 socket, A-coded, 3-pin
(93) Rotary encoder switch for tool coding for 0 – 31 tools.
(94) leading pin

Pin assignment for COS R19W-K with COS R19-A

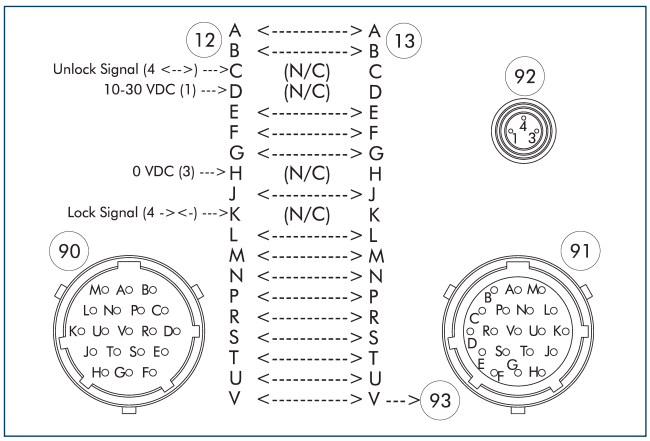

(12) Master side
(13) Adapter side
(90) Amphenol PT bayonet lock connector, 19 pins
(91) Amphenol PT bayonet lock socket, 19 pins
(92) M8 socket, A-coded, 3-pin
(93) leading pin

Pin assignment for COS R19-K with COS R14-A

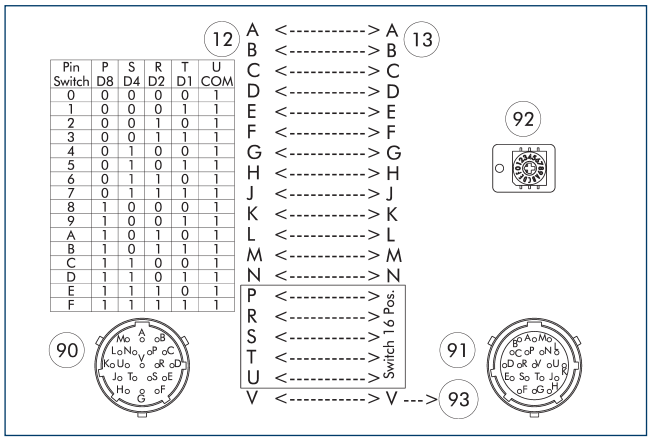

Pin Switch	P D8	S D4	R D2	T D1	U COM
0	0	0	0	0	1
1	0	0	0	1	1
2	0	0	1	0	1
3	0	0	1	1	1
4	0	1	0	0	1
5	0	1	0	1	1
6	0	1	1	0	1
7	0	1	1	1	1
8	1	0	0	0	1
9	1	0	0	1	1
A	1	0	1	0	1
B	1	0	1	1	1
C	1	1	0	0	1
D	1	1	0	1	1
E	1	1	1	0	1
F	1	1	1	1	1

(12) Master side
(13) Adapter side
(90) Amphenol PT bayonet lock connector, 19 pins
(91) Amphenol PT bayonet lock socket, 19 pins
(92) Rotary encoder switch for tool coding of 0-15 tools.
(93) leading pin

Pin assignment for COS R19R-K with COS R19-A

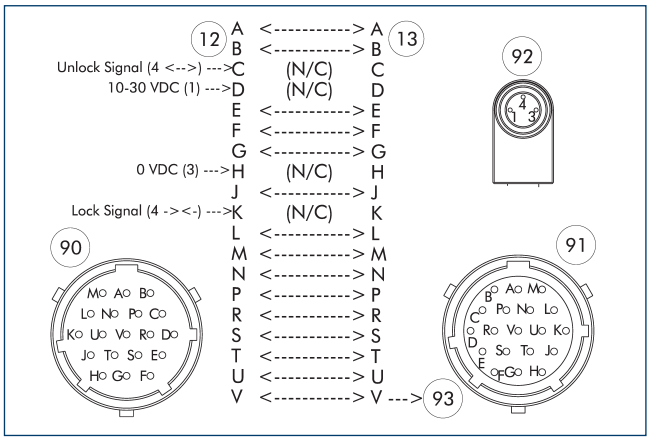

(12) Master side
(13) Adapter side
(90) Amphenol PT bayonet lock connector, 19 pins
(91) Amphenol PT bayonet lock socket, 19 pins
(92) M8 socket, A-coded, 3-pin
(93) leading pin

Pin assignment for COS R19-K with COS R19-A

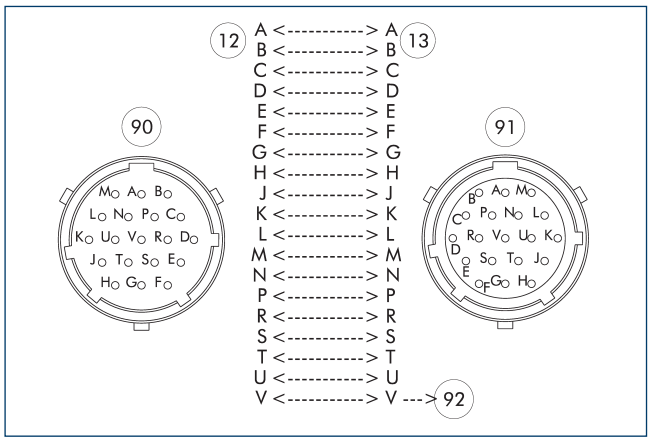

(12) Master side
(13) Adapter side
(90) Amphenol PT bayonet lock connector, 19 pins
(91) Amphenol PT bayonet lock socket, 19 pins
(92) leading pin

Cover COS JPC-A

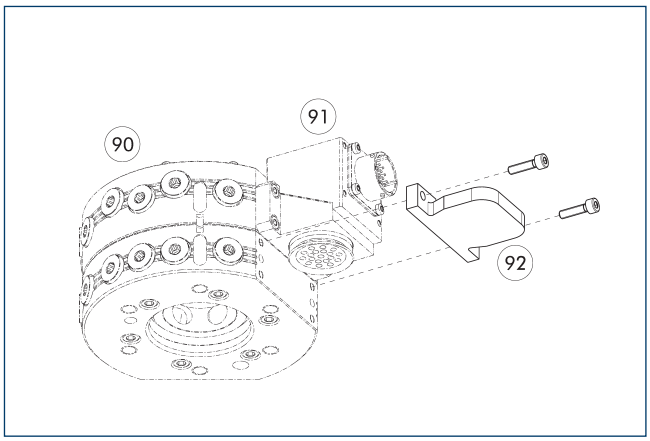

(90) Automatic tool changers CPS
(91) Optional module COS master
(92) Cover COS JPC-A

Description	ID	Suitable for
Cover		
COS JPC-A	1584095	For many electrical modules with screw-on pattern J

Cable plug/cable extension

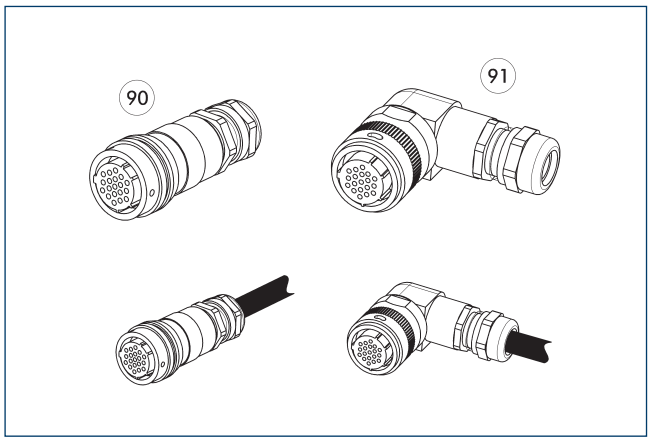

90 Plug/socket straight

91 Connector/angled socket

Other cable lengths on request.

Description	ID	Length
		[m]
Angled cable connector, robot-side		
KAS-19B-K-90-C	0301294	
Angled cable connector, tool-side		
KAS-19B-A-90-C	0301295	
Angled cable connector with cable, robot-side		
KA BW19B-L 19P-0300	0302179	3
KA BW19B-L 19P-0500	0302190	5
Angled cable connector with cable, tool-side		
KA SW19B-L 19P-0300	0302191	3
Straight cable connector, robot-side		
KAS-19B-K-0-C	0301283	
Straight cable connector, tool-side		
KAS-19B-A-0-C	0301284	
Straight cable connector with cable, robot-side		
KA BG19B-L 19P-0300	0302176	3
KA BG19B-L 19P-0500	0302177	5
Straight cable connector with cable, tool-side		
KA SG19B-L 19P-0300	0302178	3

ⓘ Detailed information and further cable connectors can be found at schunk.com

COS R26

Feed-through modules

Technical data

Description		COS R26-K	COS R26R-K	COS R26W-K	COS R26-A	COS R21-A	COS R20-A
ID		1586477	1586498	1586511	1586475	1586474	1586441
Suitable on		Change head	Change head	Change head	Tool	Tool	Tool
Screw connection diagram		J	J	J	J	J	J
Transmission type		Signal	Signal	Signal	Signal	Signal	Signal
Weight	[kg]	0.12	0.14	0.14	0.11	0.12	0.12
Min./max. ambient temperature	[°C]	5/60	5/60	5/60	5/60	5/60	5/60
Protection class IP		IP64 (only in a coupled state)	IP64 (only in a coupled state)	IP64 (only in a coupled state)	IP64 (only in a coupled state)	IP64 (only in a coupled state)	IP64 (only in a coupled state)
Number of pin contacts		26	22	22	26	21	20
Nominal current	[A]	3	3	3	3	3	3
Alternating voltage	[V AC]	250	250	250	250	250	250
Direct voltage	[V DC]	250	250	250	250	250	250
Electrical connection		Amphenol PT bayonet lock connector, 26 pins	Amphenol PT bayonet lock connector, 26 pins	Amphenol PT bayonet lock connector, 26 pins	Amphenol PT bayonet lock socket, 26 pins	Amphenol PT bayonet lock socket, 26 pins	Amphenol PT bayonet lock socket, 26 pins
Outlet connection		radial	radial	radial	radial	radial	radial
Special properties			Two integrated cables with right-angled M8 socket (A-coded, 3-pin), for connection of the locking and unlocking sensor.	Two integrated cables with straight M8 socket (A-coded, 3-pin), for connection of the locking and unlocking sensor.		Rotary encoder switch for tool coding of 0 – 15 tools. Designed for max. 0.15 A and 24 V.	Rotary encoder switch for tool coding for 0-31 tools. Designed for max. 0.15 A and 24 V.

Combination COS R26-K and COS R26-A

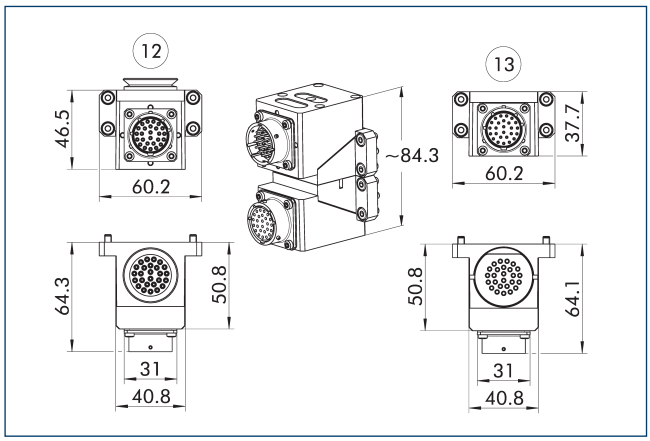

(12) Master side
(13) Adapter side

Combination possibilities R26

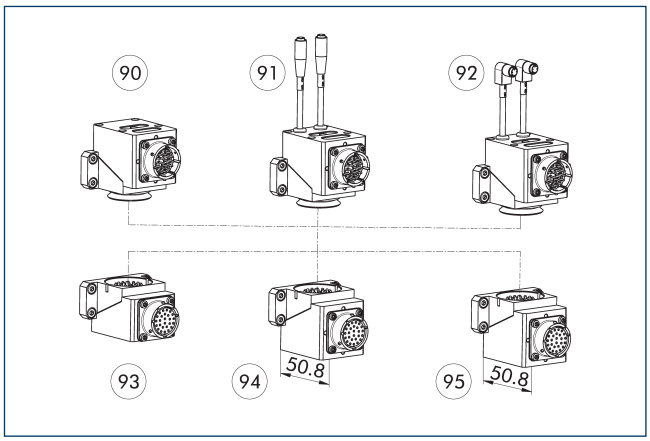

(90) COS R26-K
(91) COS R26W-K
(92) COS R26R-K
(93) COS R26-A
(94) COS R21-A
(95) COS R20-A

Pin assignment for COS R26R-K and COS R26-A

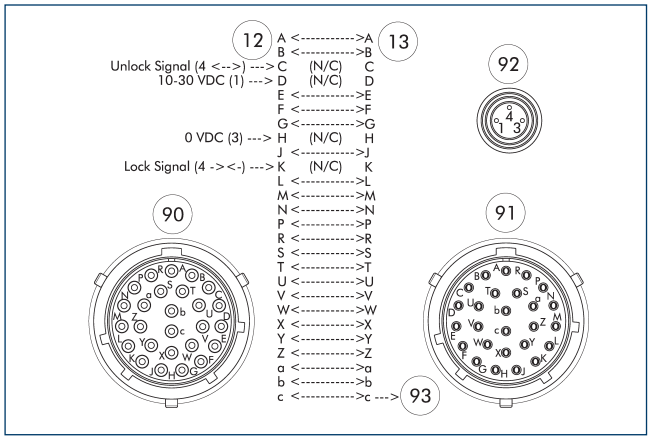

(12) Master side
(13) Adapter side
(90) Amphenol PT bayonet lock connector, 26 pins
(91) Amphenol PT bayonet lock socket, 26 pins
(92) M8 socket, A-coded, 3-pin
(93) leading pin

Pin assignment for COS R26-K and COS R20-A

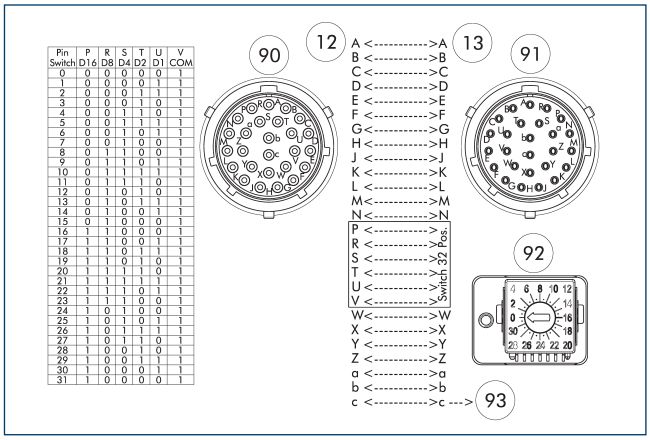

Pin Switch	P D16	R D8	S D4	T D2	U D1	V COM
0	0	0	0	0	0	1
1	0	0	0	0	1	1
2	0	0	0	1	1	1
3	0	0	0	1	0	1
4	0	0	1	1	0	1
5	0	0	1	1	1	1
6	0	0	1	0	1	1
7	0	0	1	0	0	1
8	0	1	1	0	0	1
9	0	1	1	0	1	1
10	0	1	1	1	1	1
11	0	1	1	1	0	1
12	0	1	0	1	0	1
13	0	1	0	1	1	1
14	0	1	0	0	1	1
15	0	1	0	0	0	1
16	1	1	0	0	0	1
17	1	1	0	0	1	1
18	1	1	0	1	1	1
19	1	1	0	1	0	1
20	1	1	1	1	0	1
21	1	1	1	1	1	1
22	1	1	1	0	1	1
23	1	1	1	0	0	1
24	1	0	1	0	0	1
25	1	0	1	0	1	1
26	1	0	1	1	1	1
27	1	0	1	1	0	1
28	1	0	0	1	0	1
29	1	0	0	1	1	1
30	1	0	0	0	1	1
31	1	0	0	0	0	1

(12) Master side
(13) Adapter side
(90) Amphenol PT bayonet lock connector, 26 pins
(91) Amphenol PT bayonet lock socket, 26 pins
(92) Rotary encoder switch for tool coding for 0 - 31 tools.
(93) leading pin

Pin assignment for COS R26-K and COS R26-A

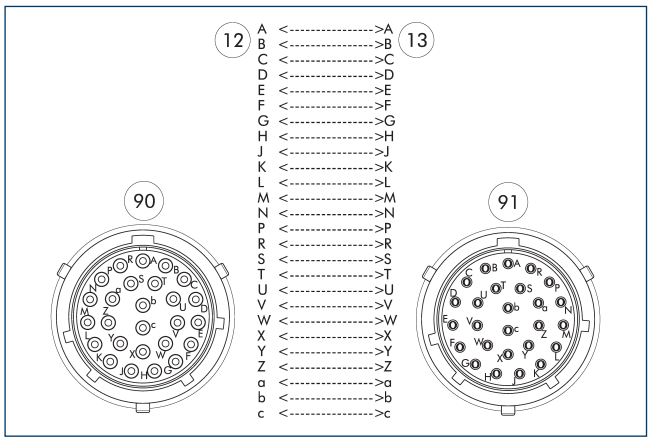

(12) Master side
(13) Adapter side
(90) Amphenol PT bayonet lock connector, 26 pins
(91) Amphenol PT bayonet lock socket, 26 pins

Pin assignment for COS R26W-K and COS R26-A

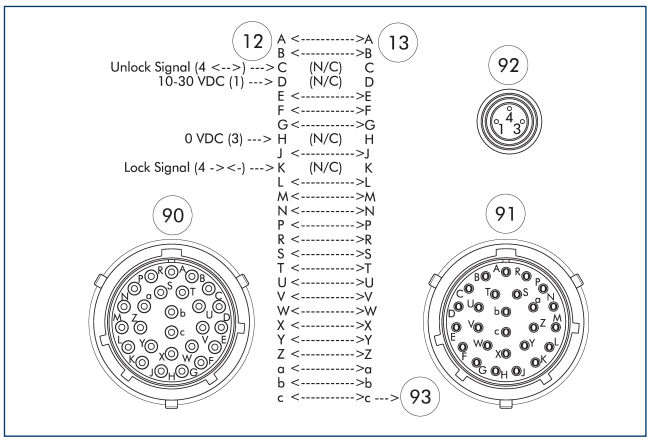

(12) Master side
(13) Adapter side
(90) Amphenol PT bayonet lock connector, 26 pins
(91) Amphenol PT bayonet lock socket, 26 pins
(92) M8 socket, A-coded, 3-pin
(93) leading pin

Pin assignment for COS R26-K and COS R21-A

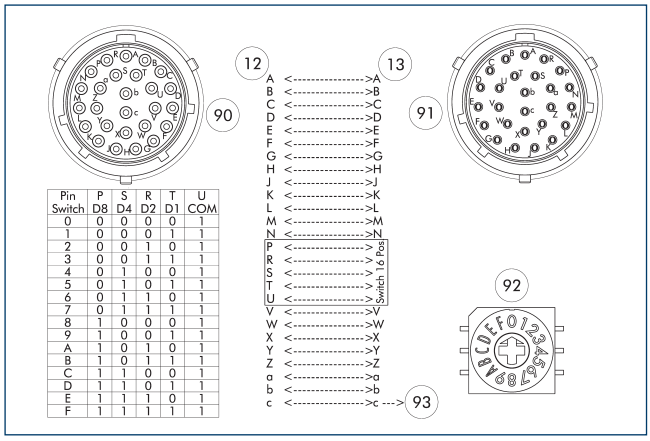

Pin Switch	P D8	S D4	R D2	T D1	U COM
0	0	0	0	0	1
1	0	0	0	1	1
2	0	0	1	0	1
3	0	0	1	1	1
4	0	1	0	0	1
5	0	1	0	1	1
6	0	1	1	0	1
7	0	1	1	1	1
8	1	0	0	0	1
9	1	0	0	1	1
A	1	0	1	0	1
B	1	0	1	1	1
C	1	1	0	0	1
D	1	1	0	1	1
E	1	1	1	0	1
F	1	1	1	1	1

(12) Master side
(13) Adapter side
(90) Amphenol PT bayonet lock connector, 26 pins
(91) Amphenol PT bayonet lock socket, 26 pins
(92) Rotary encoder switch for tool coding of 0-15 tools.
(93) leading pin

Cover COS JPC-A

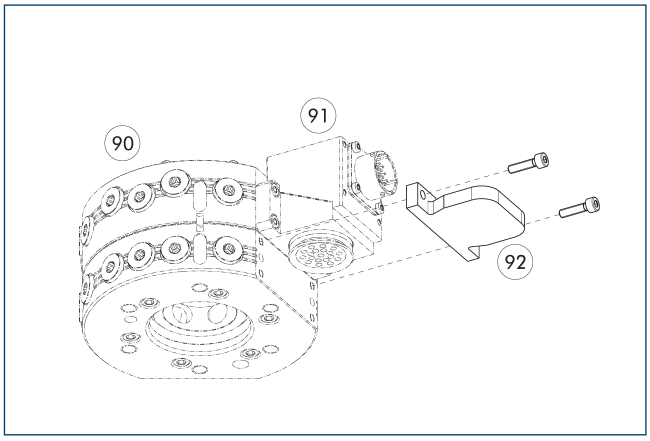

(90) Automatic tool changers CPS
(91) Optional module COS master
(92) Cover COS JPC-A

Description	ID	Suitable for
Cover		
COS JPC-A	1584095	For many electrical modules with screw-on pattern J

Cable plug/cable extension

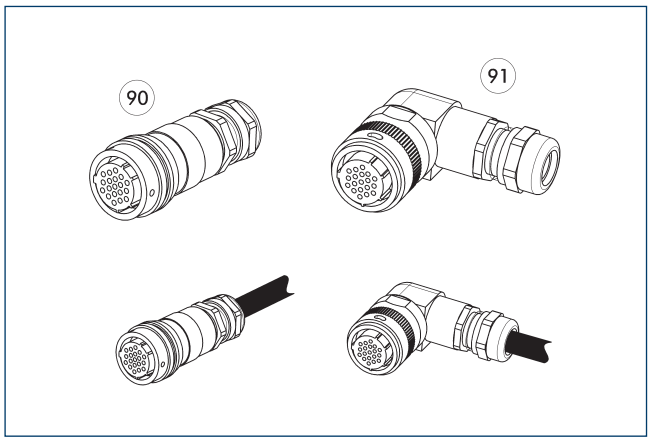

90 Plug/socket straight

91 Connector/angled socket

Other cable lengths on request.

Description	ID	Length
		[m]
Angled cable connector, robot-side		
KAS-26B-K-90-C	0301296	
Angled cable connector, tool-side		
KAS-26B-A-90-C	0301297	
Angled cable connector with cable, robot-side		
KA BW26B-L 26P-0300	0302185	3
KA BW26B-L 26P-0500	0302186	5
Angled cable connector with cable, tool-side		
KA SW26B-L 26P-0300	0302187	3
Straight cable connector, robot-side		
KAS-26B-K-0-C	0301290	
Straight cable connector, tool-side		
KAS-26B-A-0-C	0301291	
Straight cable connector with cable, robot-side		
KA BG26B-L 26P-0300	0302192	3
KA BG26B-L 26P-0500	0302193	5
Straight cable connector with cable, tool-side		
KA SG26B-L 26P-0300	0302184	3

ⓘ Detailed information and further cable connectors can be found at schunk.com

COS R32

Feed-through modules

Technical data

Description		COS R32-K	COS R32R-K	COS R32W-K	COS R32-A
ID		1586518	1586520	1586524	1586512
Suitable on		Change head	Change head	Change head	Tool
Screw connection diagram		J	J	J	J
Transmission type		Signal	Signal	Signal	Signal
Weight	[kg]	0.15	0.16	0.16	0.14
Min./max. ambient temperature	[°C]	5/60	5/60	5/60	5/60
Protection class IP		IP64 (only in a coupled state)	IP64 (only in a coupled state)	IP64 (only in a coupled state)	IP64 (only in a coupled state)
Number of pin contacts		32	32	32	32
Nominal current	[A]	3	3	3	3
Alternating voltage	[V AC]	250	250	250	250
Direct voltage	[V DC]	250	250	250	250
Electrical connection		Amphenol PT bayonet lock connector, 36 pins	Amphenol PT bayonet lock connector, 36 pins	Amphenol PT bayonet lock connector, 36 pins	Amphenol PT bayonet lock socket, 36 pins
Outlet connection		radial	radial	radial	radial
Special properties			Two integrated cables with right-angled M8 socket (A-coded, 3-pin), for connection of the locking and unlocking sensor.	Two integrated cables with straight M8 socket (A-coded, 3-pin), for connection of the locking and unlocking sensor.	

Combination COS R32-K and COS R32-A

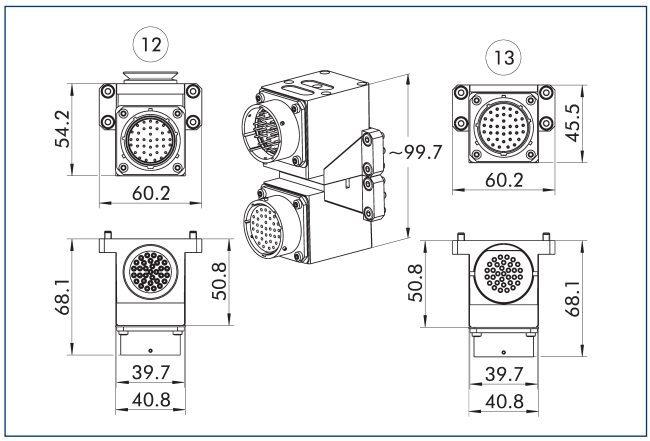

(12) Master side
(13) Adapter side

Combination possibilities R32

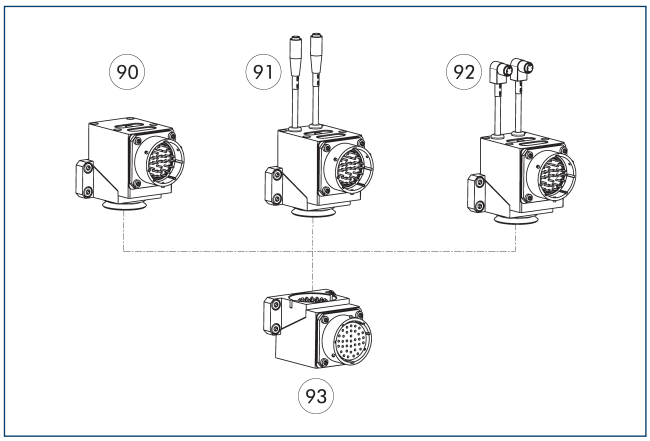

(90) COS R32-K
(91) COS R32W-K
(92) COS R32R-K
(93) COS R32-A

Pin assignment for COS R32R-K and COS R32-A

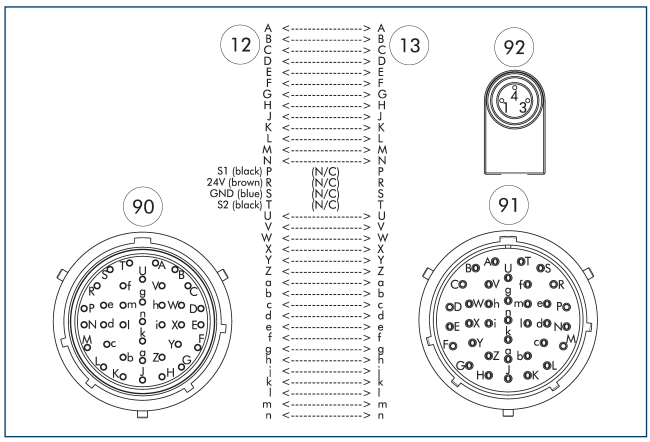

(12) Master side
(13) Adapter side
(90) Amphenol PT bayonet lock connector, 36 pins
(91) Amphenol PT bayonet lock socket, 36 pins
(92) M8 socket, A-coded, 3-pin
(93) leading pin

Pin assignment for COS R32W-K and COS R32-A

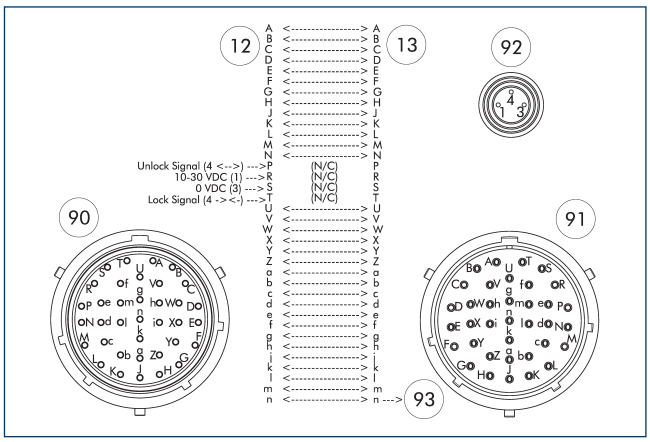

(12) Master side
(13) Adapter side
(90) Amphenol PT bayonet lock connector, 36 pins
(91) Amphenol PT bayonet lock socket, 36 pins
(92) M8 socket, A-coded, 3-pin
(93) leading pin

Pin assignment for COS R32-K and COS R32-A

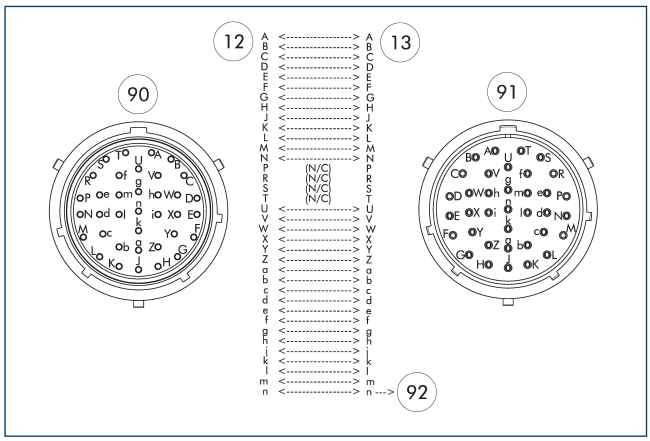

12 Master side
13 Adapter side
90 Amphenol PT bayonet lock connector, 36 pins
91 Amphenol PT bayonet lock socket, 36 pins
92 leading pin

Cover COS JPC-A

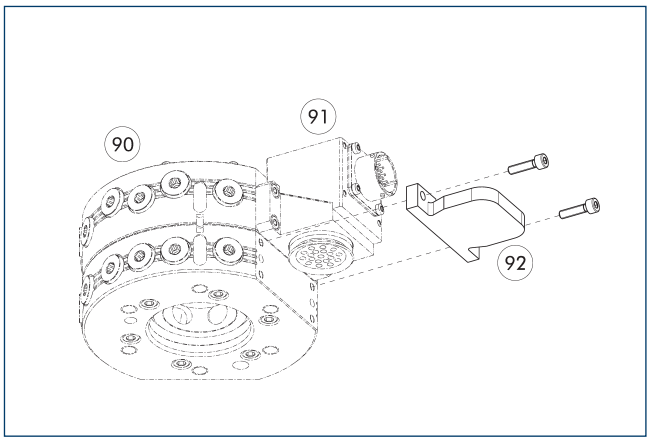

90 Automatic tool changers CPS
91 Optional module COS master
92 Cover COS JPC-A

Description	ID	Suitable for
Cover		
COS JPC-A	1584095	For many electrical modules with screw-on pattern J

Cable connector

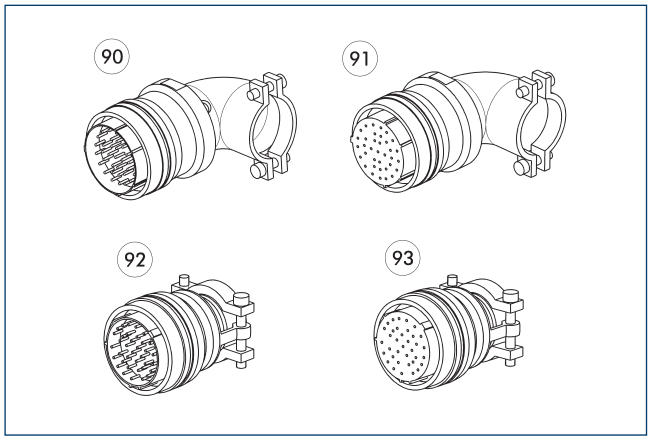

90 Angled plug
91 Angled socket
92 Straight plug
93 Straight socket

Description	ID	
Angled cable connector, robot-side		
KAS-36B-K-90	0301274	
Angled cable connector, tool-side		
KAS-36B-A-90	0301275	
Straight cable connector, robot-side		
KAS-36B-K-0	0301272	
Straight cable connector, tool-side		
KAS-36B-A-0	0301273	

ⓘ Detailed information and further cable connectors can be found at schunk.com

COS RF19

Feed-through modules

Technical data

Description		COS RF19-K	COS RF19R-K	COS RF19W-K	COS RF19-A	COS RF14-A	COS RF13-A
ID		1586678	1586679	1586691	1586677	1586676	1586674
Suitable on		Change head	Change head	Change head	Tool	Tool	Tool
Screw connection diagram		J	J	J	J	J	J
Transmission type		Signal	Signal	Signal	Signal	Signal	Signal
Weight	[kg]	0.11	0.12	0.12	0.1	0.11	0.12
Min./max. ambient temperature	[°C]	5/60	5/60	5/60	5/60	5/60	5/60
Protection class IP		IP64 (only in a coupled state)	IP64 (only in a coupled state)	IP64 (only in a coupled state)	IP64 (only in a coupled state)	IP64 (only in a coupled state)	IP64 (only in a coupled state)
Number of pin contacts		19	15	15	19	14	13
Nominal current	[A]	3	3	3	3	3	3
Alternating voltage	[V AC]	30	30	30	30	30	30
Direct voltage	[V DC]	30	30	30	30	30	30
Electrical connection		M16 connector, 19-pin	M16 connector, 19-pin	M16 connector, 19-pin	M16 socket, 19-pin	M16 socket, 19-pin	M16 socket, 19-pin
Outlet connection		radial	radial	radial	radial	radial	radial
Special properties			Two integrated cables with right-angled M8 socket (A-coded, 3-pin), for connection of the locking and unlocking sensor.	Two integrated cables with straight M8 socket (A-coded, 3-pin), for connection of the locking and unlocking sensor.		Rotary encoder switch for tool coding of 0 – 15 tools. Designed for max. 0.15 A and 24 V.	Rotary encoder switch for tool coding for 0-31 tools. Designed for max. 0.15 A and 24 V.

Combination COS RF19-K and COS RF19-A

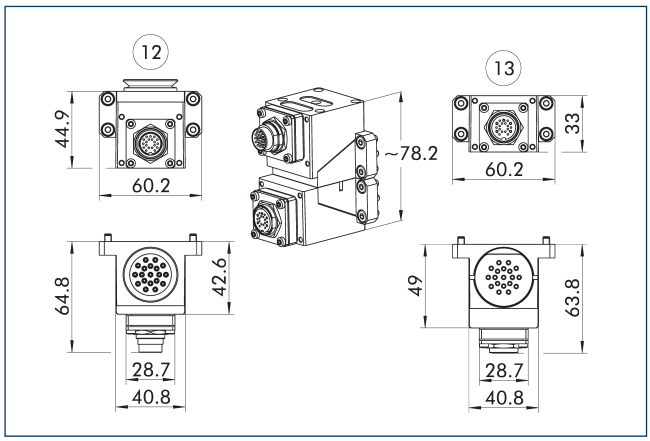

(12) Master side
(13) Adapter side

Combination possibilities RF19

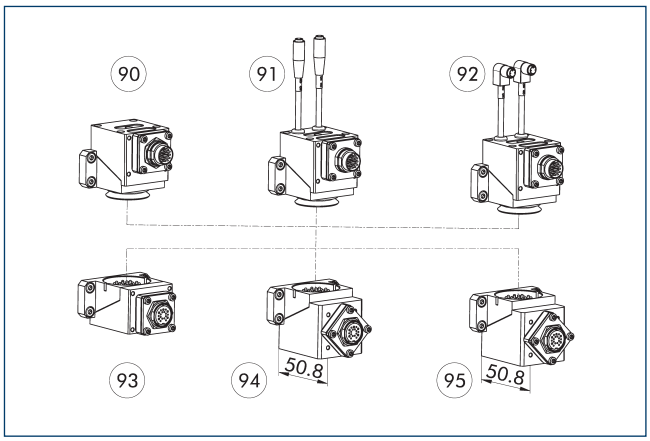

(90) COS RF19-K
(91) COS RF19W-K
(92) COS RF19R-K
(93) COS RF19-A
(94) COS RF14-A
(95) COS RF13-A

Pin assignment for COS RF19-K with COS RF14-A

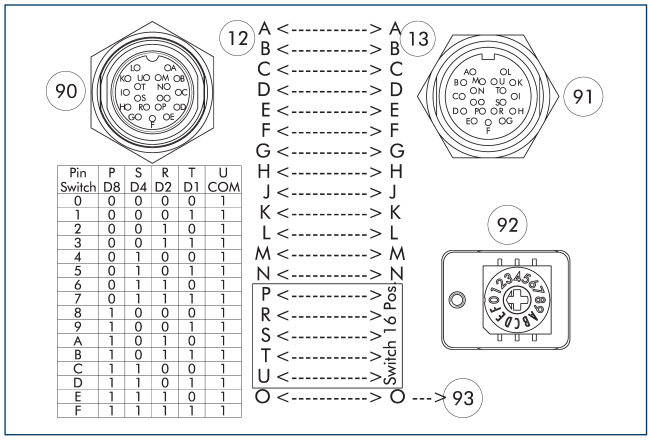

Pin Switch	P D8	S D4	R D2	T D1	U COM
0	0	0	0	0	1
1	0	0	0	1	1
2	0	0	1	0	1
3	0	0	1	1	1
4	0	1	0	0	1
5	0	1	0	1	1
6	0	1	1	0	1
7	0	1	1	1	1
8	1	0	0	0	1
9	1	0	0	1	1
A	1	0	1	0	1
B	1	0	1	1	1
C	1	1	0	0	1
D	1	1	0	1	1
E	1	1	1	0	1
F	1	1	1	1	1

(12) Master side
(13) Adapter side
(90) M16 connector, 19-pin
(91) M16 socket, 19-pin
(92) Rotary encoder switch for tool coding of 0-15 tools.
(93) leading pin

Pin assignment for COS RF19-K with COS RF13-A

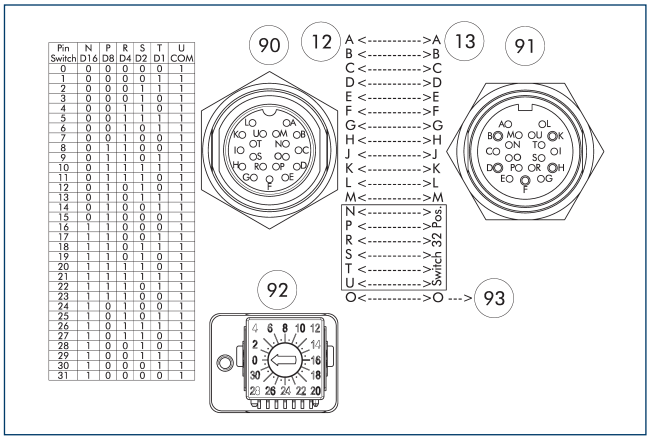

Pin Switch	N D16	P D8	R D4	S D2	T D1	U COM
0	0	0	0	0	0	1
1	0	0	0	0	1	1
2	0	0	0	1	1	1
3	0	0	0	1	0	1
4	0	0	1	1	0	1
5	0	0	1	1	1	1
6	0	0	1	0	1	1
7	0	0	1	0	0	1
8	0	1	1	0	0	1
9	0	1	1	0	1	1
10	0	1	1	1	1	1
11	0	1	1	1	0	1
12	0	1	0	1	0	1
13	0	1	0	1	1	1
14	0	1	0	0	1	1
15	0	1	0	0	0	1
16	1	1	0	0	0	1
17	1	1	0	0	1	1
18	1	1	0	1	1	1
19	1	1	0	1	0	1
20	1	1	1	1	0	1
21	1	1	1	1	1	1
22	1	1	1	0	1	1
23	1	1	1	0	0	1
24	1	0	1	0	0	1
25	1	0	1	0	1	1
26	1	0	1	1	1	1
27	1	0	1	1	0	1
28	1	0	0	1	0	1
29	1	0	0	1	1	1
30	1	0	0	0	1	1
31	1	0	0	0	0	1

(12) Master side
(13) Adapter side
(90) M16 connector, 19-pin
(91) M16 socket, 19-pin
(92) Rotary encoder switch for tool coding for 0 - 31 tools.
(93) leading pin

Pin assignment for COS RF19R-K with COS RF19-A

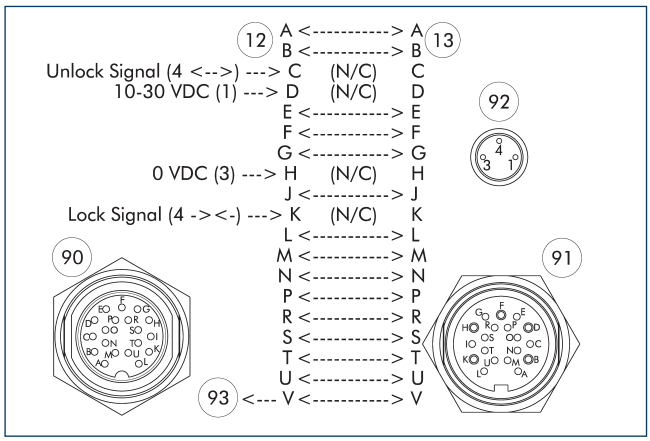

12 Master side
13 Adapter side
90 M16 connector, 19-pin
91 M16 socket, 19-pin
92 M8 socket, A-coded, 3-pin
93 leading pin

Pin assignment for COS RF19W-K with COS RF19-A

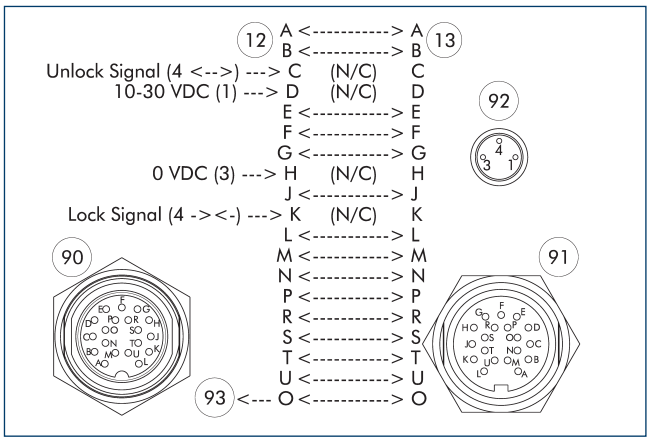

12 Master side
13 Adapter side
90 M16 connector, 19-pin
91 M16 socket, 19-pin
92 M8 socket, A-coded, 3-pin
93 leading pin

Pin assignment for COS RF19-K with COS RF19-A

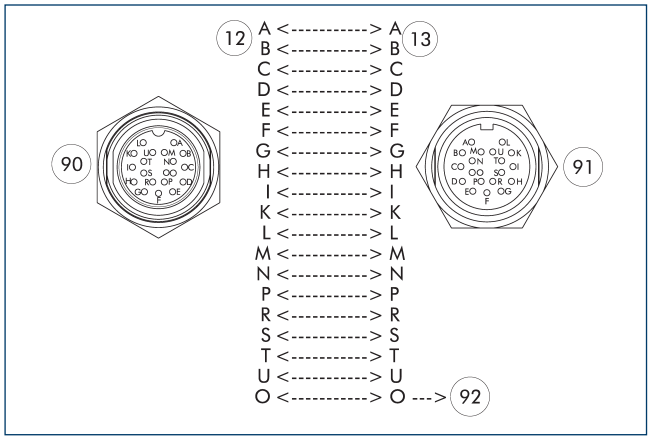

12 Master side
13 Adapter side
90 M16 connector, 19-pin
91 M16 socket, 19-pin
92 leading pin

Cover COS JPC-A

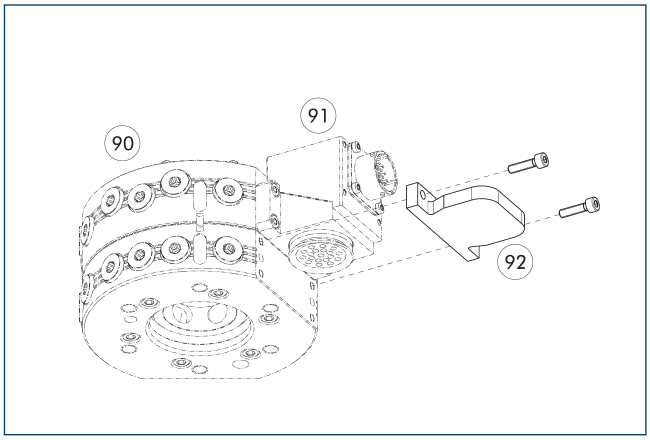

90 Automatic tool changers CPS
91 Optional module COS master
92 Cover COS JPC-A

Description	ID	Suitable for
Cover		
COS JPC-A	1584095	For many electrical modules with screw-on pattern J

Cable plug/cable extension

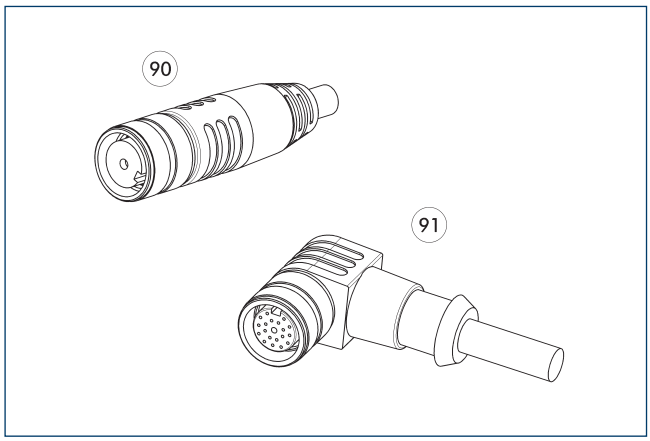

90 Connector/straight socket with extension cable

91 Connector/angled socket with extension cable

Description	ID	Length
		[m]
Angled cable connector with cable, robot-side		
KA BW19F-L 19P-0500	0302172	5
KA BW19F-L 19P-1000	0302173	10
Angled cable connector with cable, tool-side		
KA SW19F-L 19P-0300	0302175	3
Straight cable connector with cable, robot-side		
KA BG19F-L 19P-0500	0302170	5
KA BG19F-L 19P-1000	0302171	10
Straight cable connector with cable, tool-side		
KA SG19F-L 19P-0300	0302174	3

ⓘ Detailed information and further cable connectors can be found at schunk.com

COS RK19

Feed-through modules

Technical data

Description		COS RK19-K	COS RK19-A
ID		1586693	1586692
Suitable on		Change head	Tool
Screw connection diagram		J	J
Transmission type		Signal	Signal
Weight	[kg]	0.15	0.14
Min./max. ambient temperature	[°C]	5/60	5/60
Protection class IP		IP64 (only in a coupled state)	IP64 (only in a coupled state)
Number of pin contacts		19	19
Nominal current	[A]	3	3
Alternating voltage	[V AC]	48	48
Direct voltage	[V DC]	63	63
Electrical connection		Intercontec M23 threaded cap connector	Intercontec M23 threaded cap socket
Outlet connection		radial	radial

Combination COS RK19-K and COS RK19-A

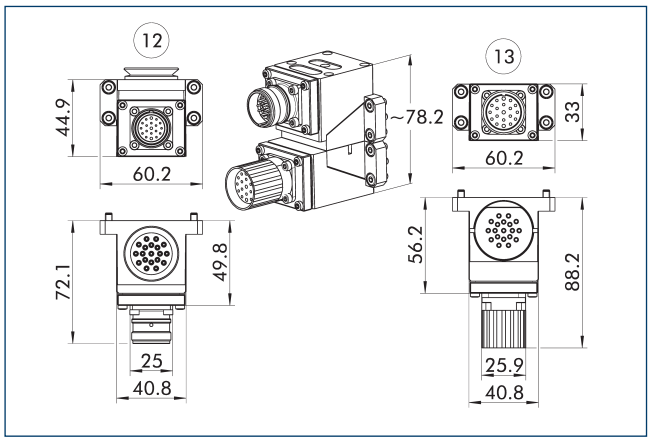

(12) Master side
(13) Adapter side

Pin assignment for COS RK19-K with COS RK19-A

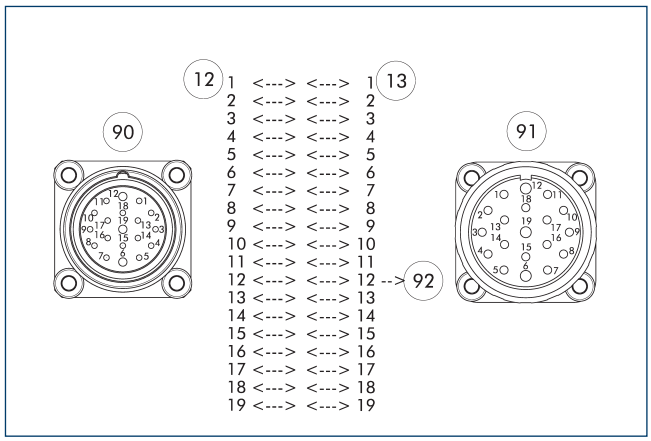

(12) Master side
(13) Adapter side
(90) Intercontec M23 threaded cap connector
(91) Intercontec M23 threaded cap socket
(92) leading pin

Cover COS JPC-A

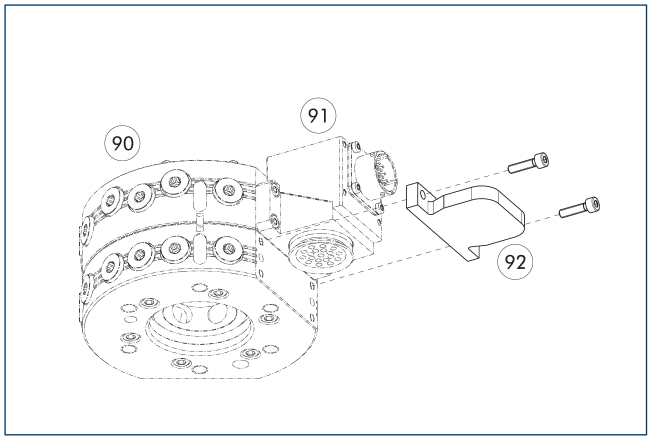

(90) Automatic tool changers CPS
(91) Optional module COS master
(92) Cover COS JPC-A

Description	ID	Suitable for
Cover		
COS JPC-A	1584095	For many electrical modules with screw-on pattern J

Cable plug/cable extension

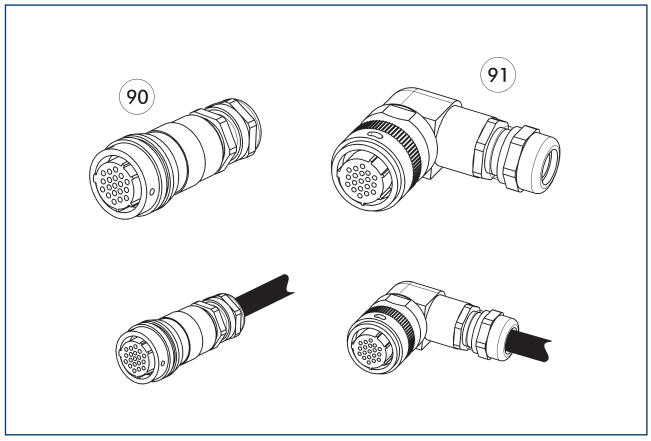

(90) Plug/socket straight
(91) Connector/angled socket

Other cable lengths on request.

Description	ID	
Straight cable connector		
KAS-RK19-A-0	1325872	
KAS-RK19-K-0	1325871	

COS S19

Feed-through modules

Technical data

Description		COS S19-K	COS S19-A	COS S14-A
ID		1586697	1586696	1586695
Suitable on		Change head	Tool	Tool
Screw connection diagram		J	J	J
Transmission type		Signal	Signal	Signal
Weight	[kg]	0.17	0.15	0.2
Min./max. ambient temperature	[°C]	5/60	5/60	5/60
Protection class IP		IP64 (only in a coupled state)	IP64 (only in a coupled state)	IP64 (only in a coupled state)
Number of pin contacts		19	19	14
Nominal current	[A]	5	5	5
Alternating voltage	[V AC]	250	250	250
Direct voltage	[V DC]	250	250	250
Electrical connection		Amphenol PT bayonet lock connector, 19 pins	Amphenol PT bayonet lock socket, 19 pins	Amphenol PT bayonet lock socket, 19 pins
Outlet connection		axial	axial	axial
Special properties				Rotary encoder switch for tool coding of 0 – 15 tools. Designed for max. 0.15 A and 24 V.

Combination COS S19-K and COS S19-A

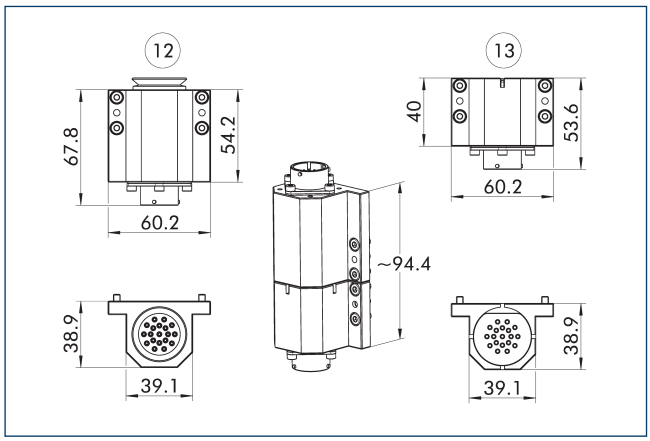

(12) Master side
(13) Adapter side

Combination possibilities S19

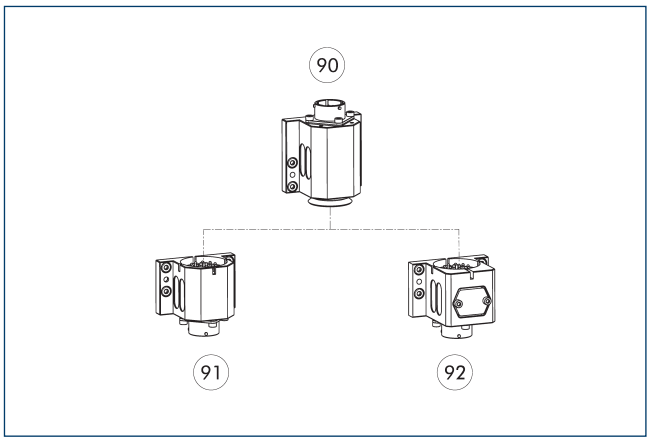

(90) COS S19-K
(91) COS S19-A
(92) COS S14-A

Pin assignment for COS S19-K with COS S14-A

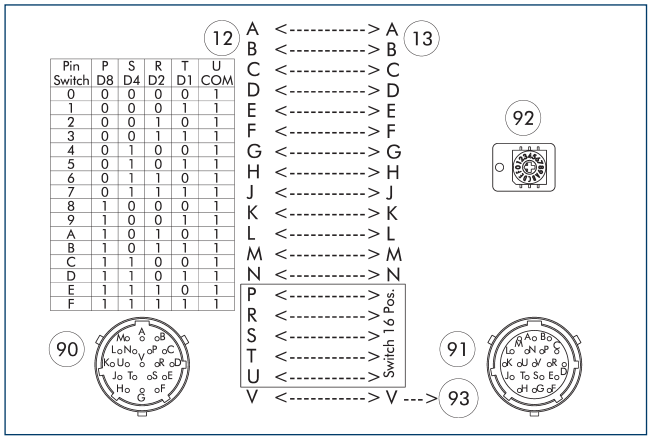

Pin Switch	P D8	S D4	R D2	T D1	U COM
0	0	0	0	0	1
1	0	0	0	1	1
2	0	0	1	0	1
3	0	0	1	1	1
4	0	1	0	0	1
5	0	1	0	1	1
6	0	1	1	0	1
7	0	1	1	1	1
8	1	0	0	0	1
9	1	0	0	1	1
A	1	0	1	0	1
B	1	0	1	1	1
C	1	1	0	0	1
D	1	1	0	1	1
E	1	1	1	0	1
F	1	1	1	1	1

(12) Master side
(13) Adapter side
(90) Amphenol PT bayonet lock connector, 19 pins
(91) Amphenol PT bayonet lock socket, 19 pins
(92) Rotary encoder switch for tool coding of 0-15 tools.
(93) leading pin

Pin assignment for COS S19-K with COS S19-A

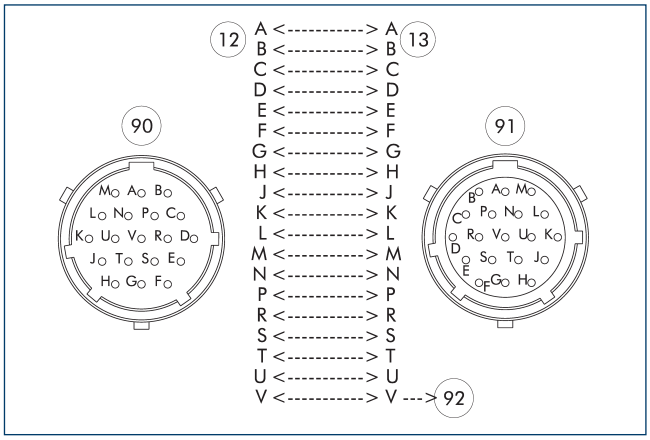

(12) Master side
(13) Adapter side
(90) Amphenol PT bayonet lock connector, 19 pins
(91) Amphenol PT bayonet lock socket, 19 pins
(92) leading pin

Cover COS JPC-A

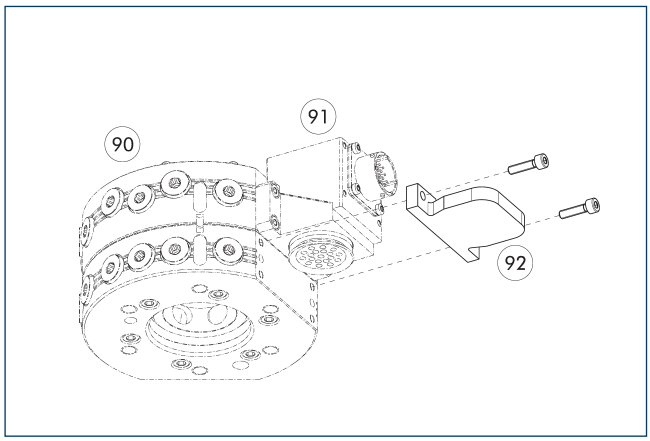

(90) Automatic tool changers CPS
(91) Optional module COS master
(92) Cover COS JPC-A

Description	ID	Suitable for
Cover		
COS JPC-A	1584095	For many electrical modules with screw-on pattern J

Cable plug/cable extension

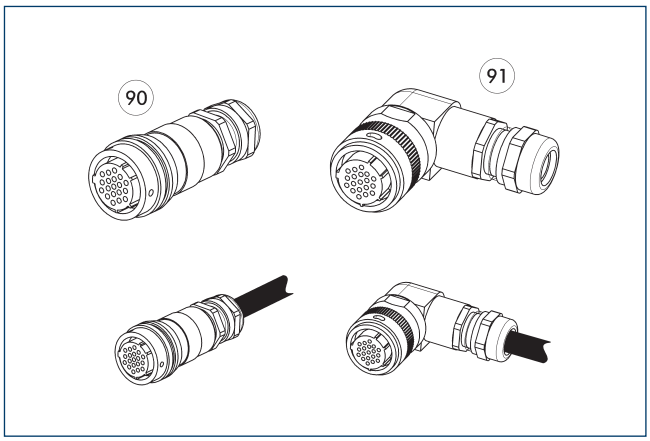

(90) Plug/socket straight
(91) Connector/angled socket

Other cable lengths on request.

Description	ID	Length
		[m]
Angled cable connector, robot-side		
KAS-19B-K-90-C	0301294	
Angled cable connector, tool-side		
KAS-19B-A-90-C	0301295	
Angled cable connector with cable, robot-side		
KA BW19B-L 19P-0300	0302179	3
KA BW19B-L 19P-0500	0302190	5
Angled cable connector with cable, tool-side		
KA SW19B-L 19P-0300	0302191	3
Straight cable connector, robot-side		
KAS-19B-K-0-C	0301283	
Straight cable connector, tool-side		
KAS-19B-A-0-C	0301284	
Straight cable connector with cable, robot-side		
KA BG19B-L 19P-0300	0302176	3
KA BG19B-L 19P-0500	0302177	5
Straight cable connector with cable, tool-side		
KA SG19B-L 19P-0300	0302178	3

ⓘ Detailed information and further cable connectors can be found at schunk.com

COS S26

Feed-through modules

Technical data

Description		COS S26-K	COS S26-A
ID		1586711	1586710
Suitable on		Change head	Tool
Screw connection diagram		J	J
Transmission type		Signal	Signal
Weight	[kg]	0.18	0.14
Min./max. ambient temperature	[°C]	5/60	5/60
Protection class IP		IP64 (only in a coupled state)	IP64 (only in a coupled state)
Number of pin contacts		26	26
Nominal current	[A]	3	3
Alternating voltage	[V AC]	250	250
Direct voltage	[V DC]	250	250
Electrical connection		Amphenol PT bayonet lock connector, 26 pins	Amphenol PT bayonet lock socket, 26 pins
Outlet connection		axial	axial

Combination COS S26-K and COS S26-A

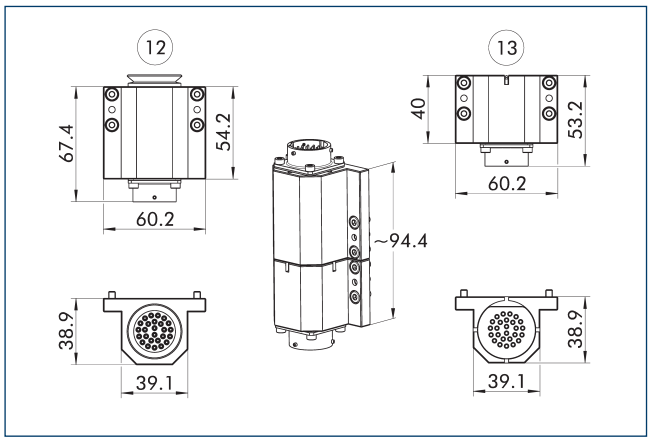

12 Master side
13 Adapter side

Pin assignment for COS S26-K with COS S26-A

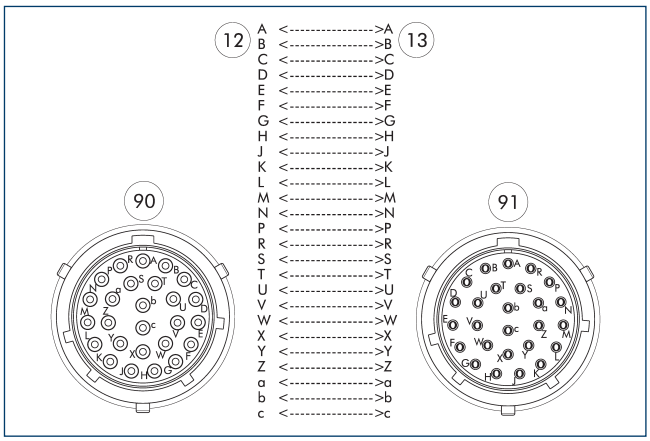

12 Master side
13 Adapter side
90 Amphenol PT bayonet lock connector, 26 pins
91 Amphenol PT bayonet lock socket, 26 pins

Cover COS JPC-A

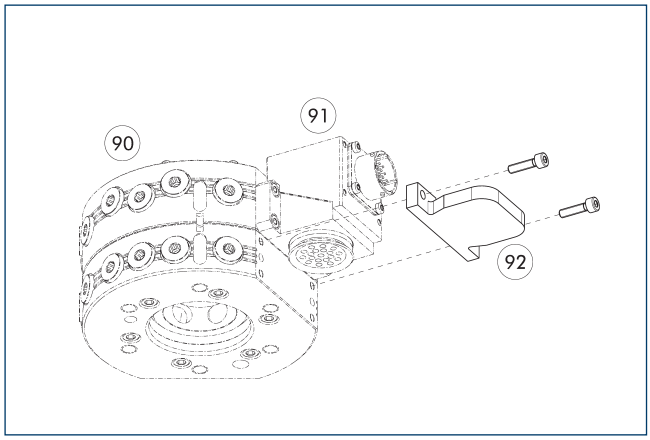

90 Automatic tool changers CPS
91 Optional module COS master
92 Cover COS JPC-A

Description	ID	Suitable for
Cover		
COS JPC-A	1584095	For many electrical modules with screw-on pattern J

Cable plug/cable extension

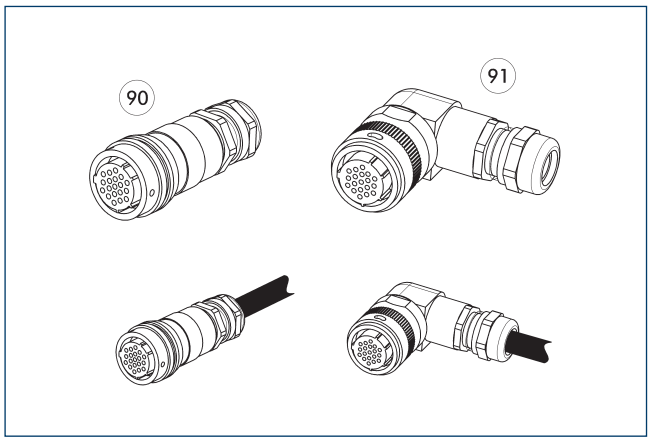

90 Plug/socket straight

91 Connector/angled socket

Other cable lengths on request.

Description	ID	Length
		[m]
Angled cable connector, robot-side		
KAS-26B-K-90-C	0301296	
Angled cable connector, tool-side		
KAS-26B-A-90-C	0301297	
Angled cable connector with cable, robot-side		
KA BW26B-L 26P-0300	0302185	3
KA BW26B-L 26P-0500	0302186	5
Angled cable connector with cable, tool-side		
KA SW26B-L 26P-0300	0302187	3
Straight cable connector, robot-side		
KAS-26B-K-0-C	0301290	
Straight cable connector, tool-side		
KAS-26B-A-0-C	0301291	
Straight cable connector with cable, robot-side		
KA BG26B-L 26P-0300	0302192	3
KA BG26B-L 26P-0500	0302193	5
Straight cable connector with cable, tool-side		
KA SG26B-L 26P-0300	0302184	3

ⓘ Detailed information and further cable connectors can be found at schunk.com

COS SA2

Feed-through modules

Technical data

Description		COS SA2-K	COS SA2-A	COS SA3-A
ID		1586714	1586712	1586715
Suitable on		Change head	Tool	Tool
Screw connection diagram		L	L	L
Transmission type		Signal	Signal	Signal
Weight	[kg]	0.77	0.58	0.59
Min./max. ambient temperature	[°C]	5/60	5/60	5/60
Protection class IP		IP64 (only in a coupled state)	IP64 (only in a coupled state)	IP64 (only in a coupled state)
Number of pin contacts		17	17	13
Nominal current	[A]	5	5	5
Alternating voltage	[V AC]	250	250	250
Direct voltage	[V DC]	250	250	250
Electrical connection		Amphenol MS threaded cap connector, 26 pins	Amphenol MS threaded cap socket, 19 pins	Amphenol MS threaded cap socket, 19 pins
Outlet connection		radial	radial	radial
Special properties		17 pins for free use, pin A and B predefined (0 VDC and 24 VDC). Proximity switch cable for piston stroke monitoring and presence monitoring can be plugged in.	17 pins for free use.	13 pins for free use, rotary encoder switch for tool coding of 0 – 15 tools. Designed for max. 0.15 A and 24 V.

Combination COS SA2-K and COS SA2-A

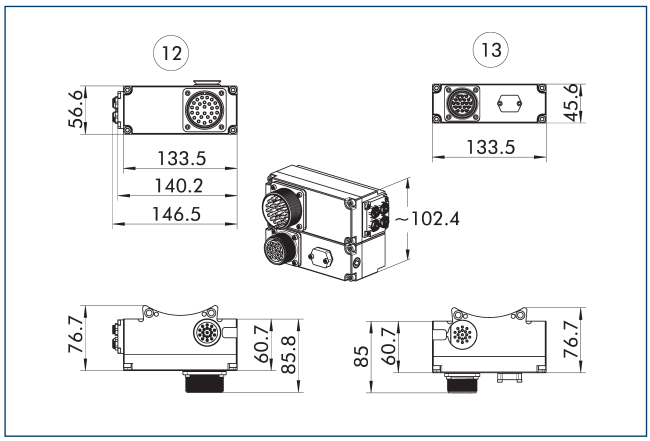

12 Master side
13 Adapter side

Combination possibilities SA2

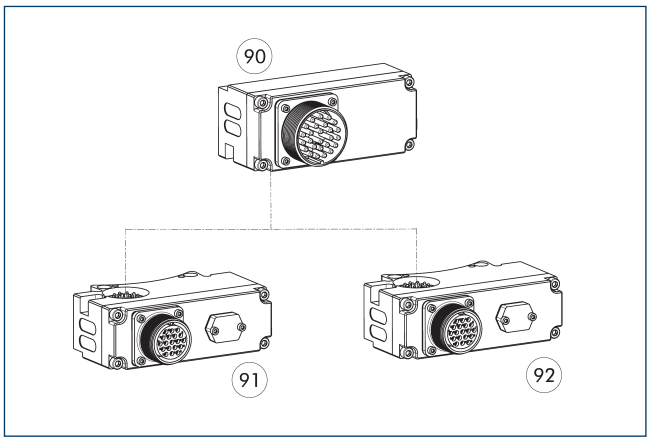

90 COS SA2-K
91 COS SA3-A
92 COS SA2-A

Pneumatic control module

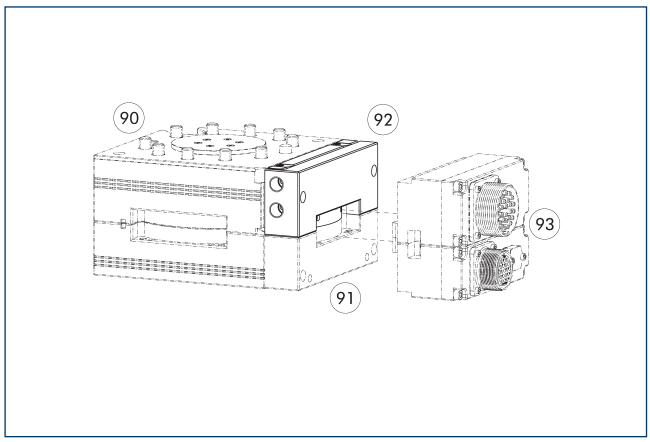

90 Automatic tool changer CPS
91 Distance plate
92 Pneumatic control module COS master
93 Optional module COS master and adapter

Description	ID	Screw connection diagram
Fluid feed-through module		
COS JB2-K	1586302	L1
COS JB3-K	1586303	L2

Pin assignment for COS SA2-K with COS SA2-A

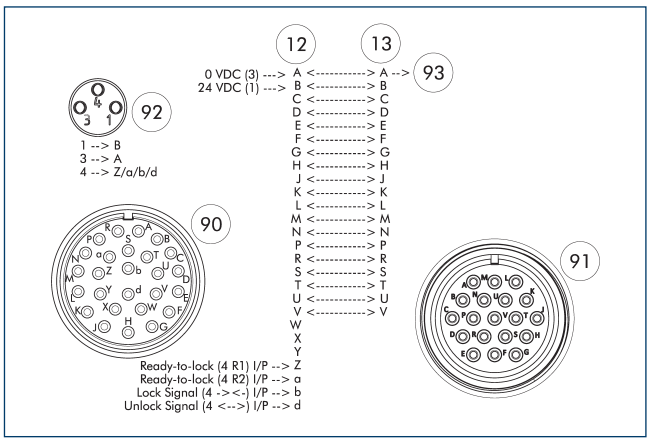

12 Master side
13 Adapter side
90 Amphenol MS threaded cap connector, 26 pins
91 Amphenol MS threaded cap socket, 19 pins
92 M8 socket, A-coded, 3-pin
93 leading pin

Pin assignment for COS SA2-K with COS SA3-A

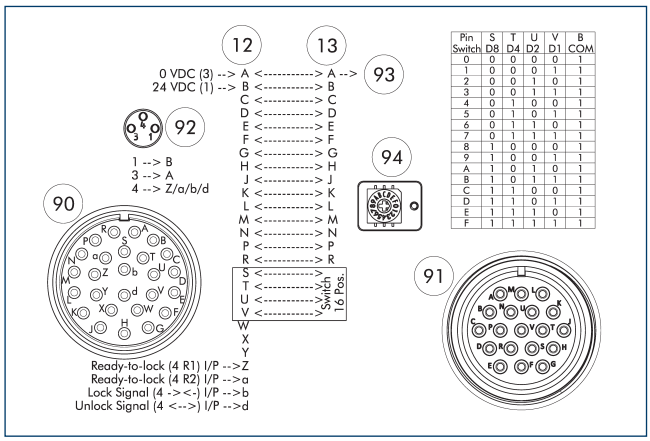

Pin Switch	S D8	T D4	U D2	V D1	B COM
0	0	0	0	0	1
1	0	0	0	1	1
2	0	0	1	0	1
3	0	0	1	1	1
4	0	1	0	0	1
5	0	1	0	1	1
6	0	1	1	0	1
7	0	1	1	1	1
8	1	0	0	0	1
9	1	0	0	1	1
A	1	0	1	0	1
B	1	0	1	1	1
C	1	1	0	0	1
D	1	1	0	1	1
E	1	1	1	0	1
F	1	1	1	1	1

(12) Master side
(13) Adapter side
(90) Amphenol MS threaded cap connector, 26 pins
(91) Amphenol MS threaded cap socket, 19 pins
(92) M8 socket, A-coded, 3-pin
(93) leading pin
(94) Rotary encoder switch for tool coding of 0-15 tools.
(95) M12 socket, A-coded, 4-pin

Cover COS UAA-A

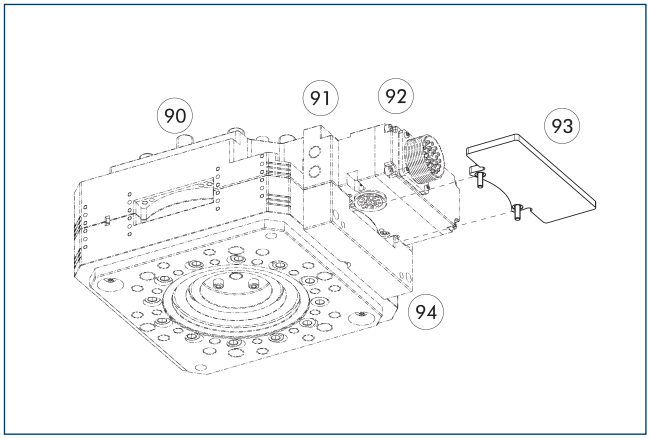

(90) Automatic tool changer CPS
(91) Pneumatic control module COS master
(92) Optional module COS master
(93) Cover COS UAA-A
(94) Distance plate

Description	ID	Suitable for
Cover		
COS UAA-A	1584130	COS SA2-K and COS VB7-K

Cable plug/cable extension

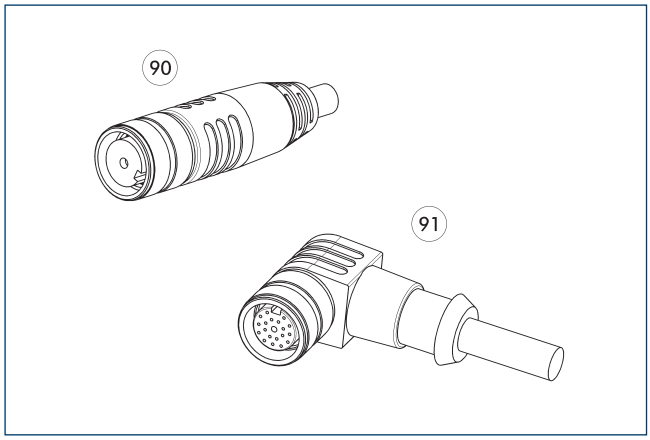

(90) Connector/straight socket with extension cable
(91) Connector/angled socket with extension cable

Description	ID	
Angled cable connector, robot-side		
KAS-26G-K-90	0301235	
Angled cable connector, tool-side		
KAS-19G-A-90	0301237	
Straight cable connector, robot-side		
KAS-26G-K-0	0301234	
Straight cable connector, tool-side		
KAS-19G-A-0	0301233	

ⓘ Detailed information and further cable connectors can be found at schunk.com

COS SF19

Feed-through modules

Technical data

Description		COS SF19-K	COS SF19-A
ID		1586718	1586717
Suitable on		Change head	Tool
Screw connection diagram		J	J
Transmission type		Signal	Signal
Weight	[kg]	0.17	0.13
Min./max. ambient temperature	[°C]	5/60	5/60
Protection class IP		IP64 (only in a coupled state)	IP64 (only in a coupled state)
Number of pin contacts		19	19
Nominal current	[A]	3	3
Alternating voltage	[V AC]	30	30
Direct voltage	[V DC]	30	30
Electrical connection		M16 connector, 19-pin	M16 socket, 19-pin
Outlet connection		axial	axial

Combination COS SF19-K and COS SF19-A

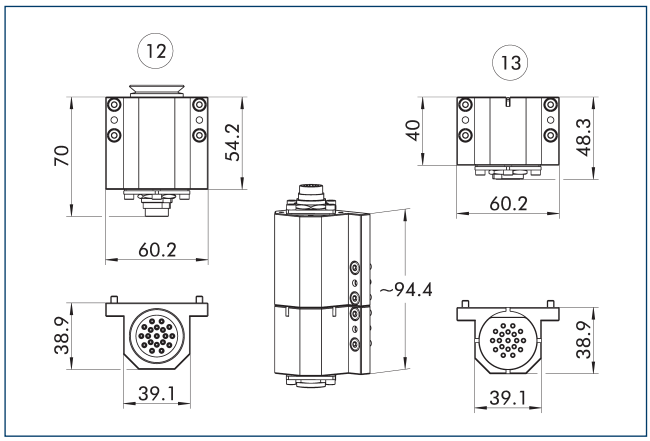

12 Master side
13 Adapter side

Pin assignment for COS SF19-K with COS SF19-A

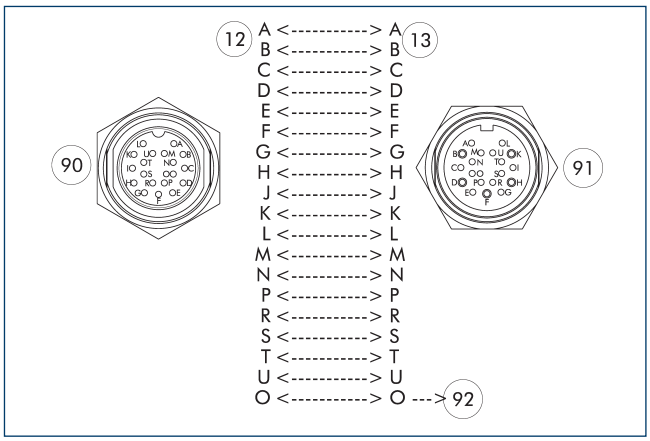

12 Master side
13 Adapter side
90 M16 connector, 19-pin
91 M16 socket, 19-pin
92 leading pin

Cover COS JPC-A

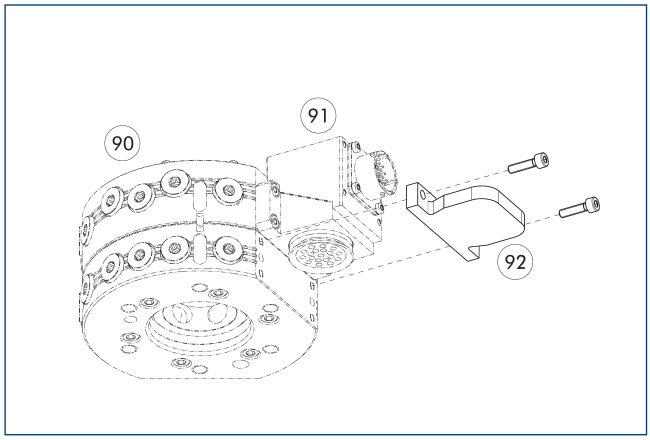

90 Automatic tool changers CPS
91 Optional module COS master
92 Cover COS JPC-A

Description	ID	Suitable for
Cover		
COS JPC-A	1584095	For many electrical modules with screw-on pattern J

COS VB7

Feed-through modules

Technical data

Description		COS VB7-K	COS VB2-A	COS VB3-A
ID		1586753	1586751	1586752
Suitable on		Change head	Tool	Tool
Screw connection diagram		L	L	L
Transmission type		Signal	Signal	Signal
Weight	[kg]	0.77	0.59	0.6
Min./max. ambient temperature	[°C]	5/60	5/60	5/60
Protection class IP		IP64 (only in a coupled state)	IP64 (only in a coupled state)	IP64 (only in a coupled state)
Number of pin contacts		14	14	10
Nominal current	[A]	5	5	5
Alternating voltage	[V AC]	250	250	250
Direct voltage	[V DC]	250	250	250
Electrical connection		Amphenol MS threaded cap connector, 26 pins	Amphenol MS threaded cap socket, 19 pins	Amphenol MS threaded cap socket, 19 pins
Outlet connection		radial	radial	radial
Special properties		Control module for use with COS JU2-K and COS JU3-K, 14 pins for free use.	14 pins for free use, storage position sensor can be plugged in (RTU tool side).	10 pins for free use, rotary encoder switch for tool coding of 0 – 15 tools. Designed for max. 0.15 A and 24 V, storage position sensor attachable (RTU tool side).

Combination COS VB7-K and COS VB2-A

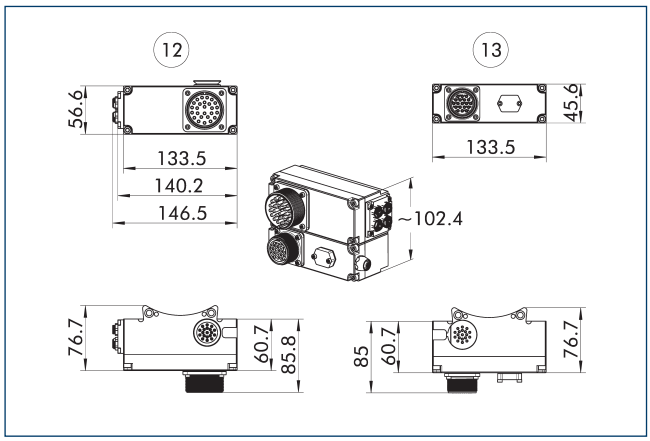

12 Master side
13 Adapter side

Combination possibilities VB7

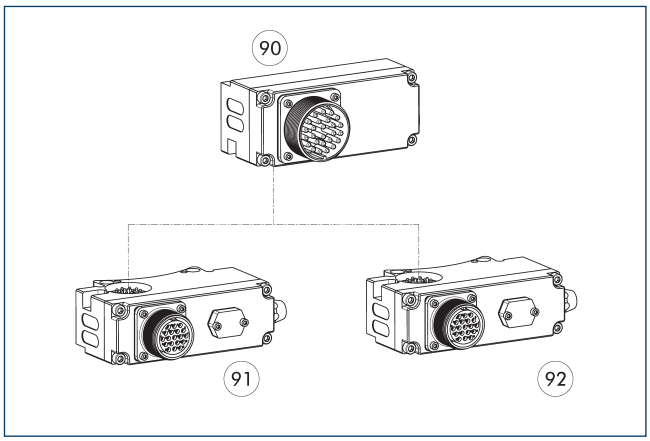

90 COS VB7-K
91 COS VB3-A
92 COS VB2-A

Pneumatic control module

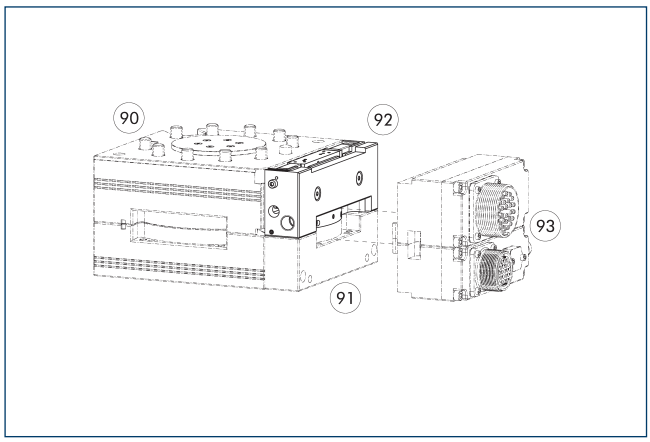

90 Automatic tool changer CPS
91 Distance plate
92 Pneumatic control module COS master
93 Control module COS master and adapter

Description	ID	Screw connection diagram
Fluid feed-through module		
COS JU2-K	1586306	L1
COS JU3-K	1586308	L2

MMS 54-S-M12 for COS VB7 with SM-MMS 54

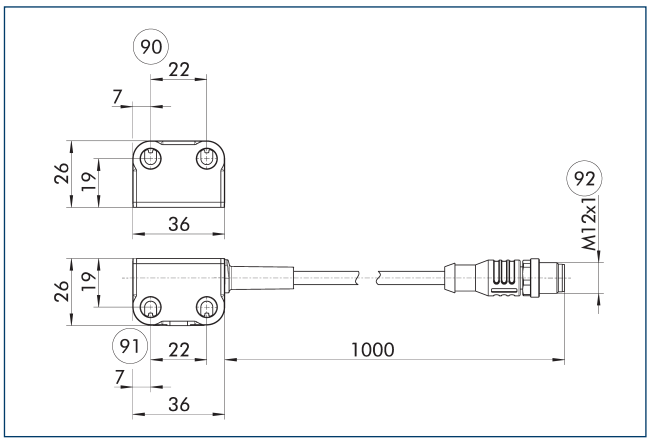

90 Assembly at the storing station
91 Mounting on the CPS adapter
92 M12, 5-pin, A-coded

Description	ID	
Magnetic switches		
MMS 54-S-M12	1653302	
SM-MMS 54	1653303	

ⓘ The SM-MMS 54 switching solenoid can only be used in combination with the MMS 54-S-M12 sensor.

Pin assignment for COS VB7-K with COS VB2-A

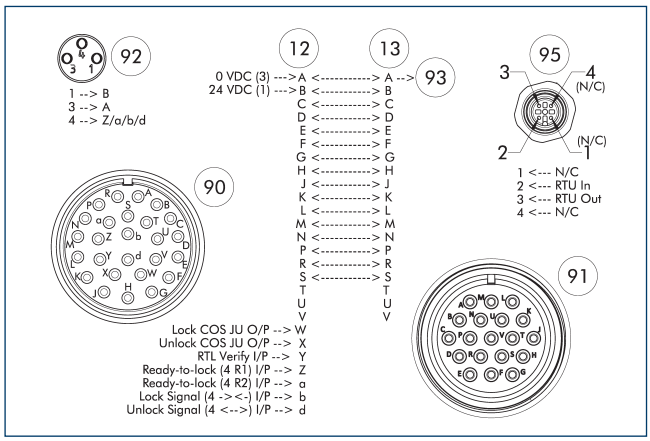

- (12) Master side
- (13) Adapter side
- (90) Amphenol MS threaded cap connector, 26 pins
- (91) Amphenol MS threaded cap socket, 19 pins
- (92) M8 socket, A-coded, 3-pin
- (93) leading pin
- (95) M12 socket, A-coded, 4-pin

Pin assignment for COS VB7-K with COS VB3-A

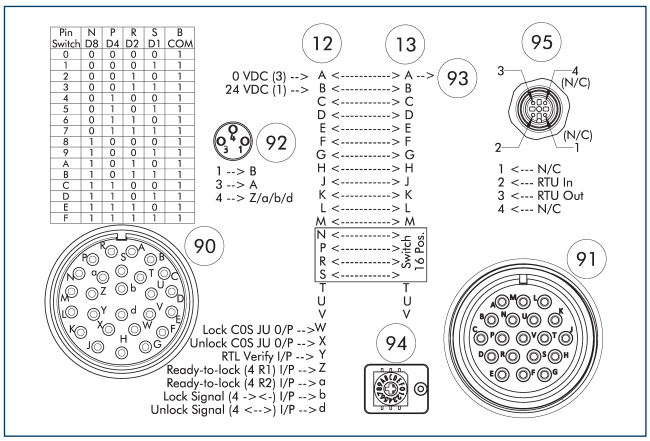

- (12) Master side
- (13) Adapter side
- (90) Amphenol MS threaded cap connector, 26 pins
- (91) Amphenol MS threaded cap socket, 19 pins
- (92) M8 socket, A-coded, 3-pin
- (93) leading pin
- (94) Rotary encoder switch for tool coding of 0 – 15 tools.
- (95) M12 socket, A-coded, 4-pin

Cover COS UAA-A

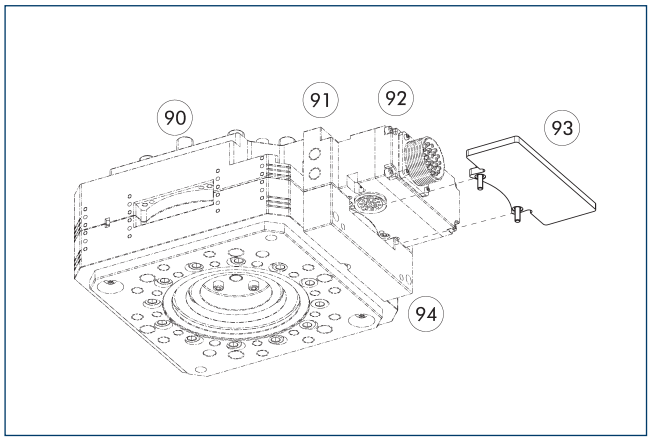

- (90) Automatic tool changer CPS
- (91) Pneumatic control module COS master
- (92) Optional module COS master
- (93) Cover COS UAA-A
- (94) Distance plate

Description	ID	Suitable for
Cover		
COS UAA-A	1584130	COS SA2-K and COS VB7-K

Cable plug/cable extension

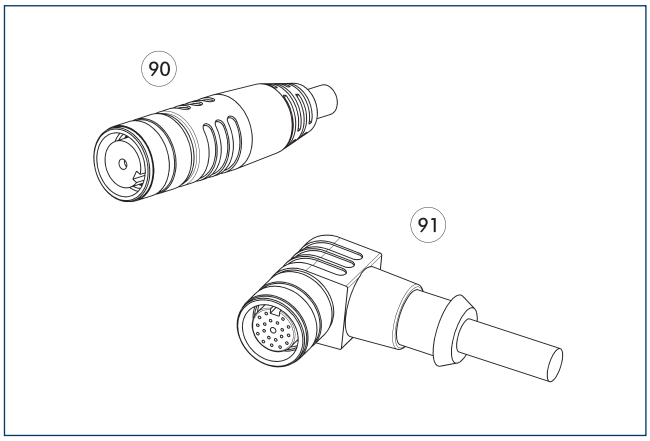

- (90) Connector/straight socket with extension cable
- (91) Connector/angled socket with extension cable

Description	ID	
Angled cable connector, robot-side		
KAS-26G-K-90	0301235	
Angled cable connector, tool-side		
KAS-19G-A-90	0301237	
Straight cable connector, robot-side		
KAS-26G-K-0	0301234	
Straight cable connector, tool-side		
KAS-19G-A-0	0301233	

ⓘ Detailed information and further cable connectors can be found at schunk.com

COS X7G

Feed-through modules

Technical data

Description		COS X7G-K	COS X7G-A
ID		1586757	1586756
Suitable on		Change head	Tool
Screw connection diagram		J	J
Transmission type		ultrasonic	ultrasonic
Weight	[kg]	0.13	0.11
Min./max. ambient temperature	[°C]	5/60	5/60
Protection class IP		IP40 (only in coupled status)	IP40 (only in coupled status)
Number of pin contacts		1	1
Nominal current	[A]	1	1
Alternating voltage	[V AC]	1000	1000
Direct voltage	[V DC]	1000	1000
Frequency	[kHz]	30	30
Electrical connection		Bulkhead SHV	Bulkhead SHV
Outlet connection		radial	radial
Special properties		For ultrasound welding and cutting applications, shielding insulated from module housing.	For ultrasound welding and cutting applications, shielding insulated from module housing.

Combination COS X7G-K and COS X7G-A

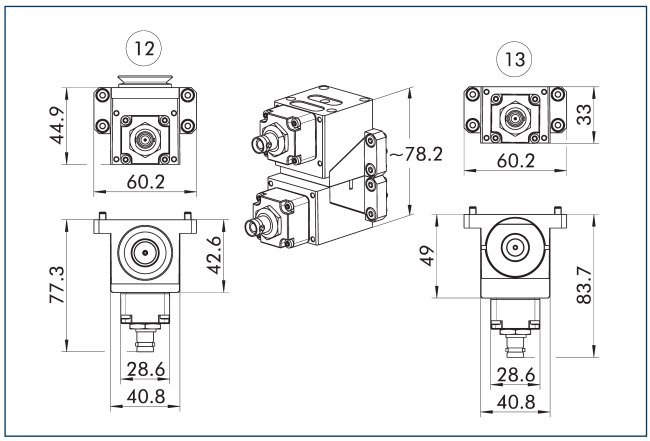

12 Master side
13 Adapter side

Pin assignment for COS X7G-K with COS X7G-A

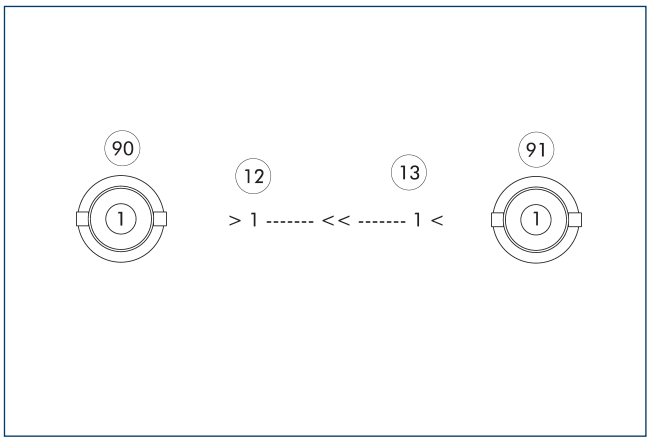

12 Master side
13 Adapter side
90 Bulkhead SHV
91 Bulkhead SHV

COS MT14

Feed-through modules

Technical data

Description		COS MT14-K	COS MT14-A
ID		1586648	1586646
Suitable on		Change head	Tool
Screw connection diagram		J	J
Transmission type		Power	Power
Weight	[kg]	0.31	0.33
Min./max. ambient temperature	[°C]	5/60	5/60
Protection class IP		IP64 (only in a coupled state)	IP64 (only in a coupled state)
Number of pin contacts		14	14
Nominal current	[A]	13	13
Alternating voltage	[V AC]	450	450
Direct voltage	[V DC]	700	700
Electrical connection		Amphenol MS threaded cap connector, 19 pins	Amphenol MS threaded cap socket, 19 pins
Electrical connection outlet		tangential	tangential
Special properties		Right cable outlet	Right cable outlet

Combination COS MT14-K and COS MT14-A

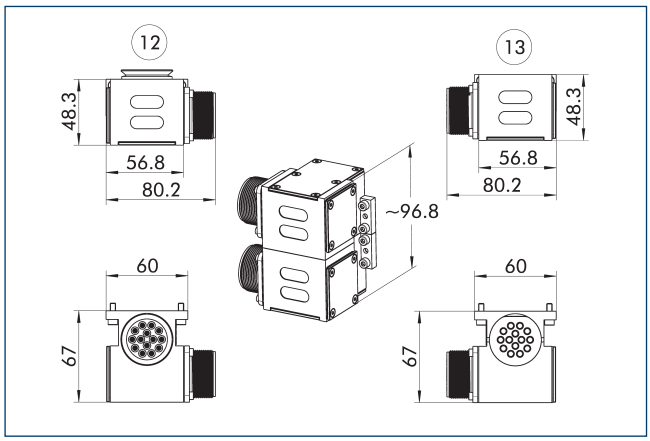

12 Master side
13 Adapter side

Pin assignment for COS MT14-K with COS MT14-A

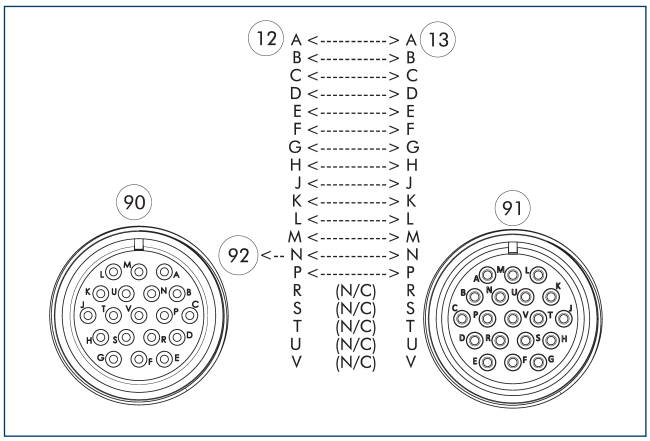

12 Master side
13 Adapter side
90 Amphenol MS threaded cap connector, 19 pins
91 Amphenol MS threaded cap socket, 19 pins
92 leading pin

Cover COS JPC-A

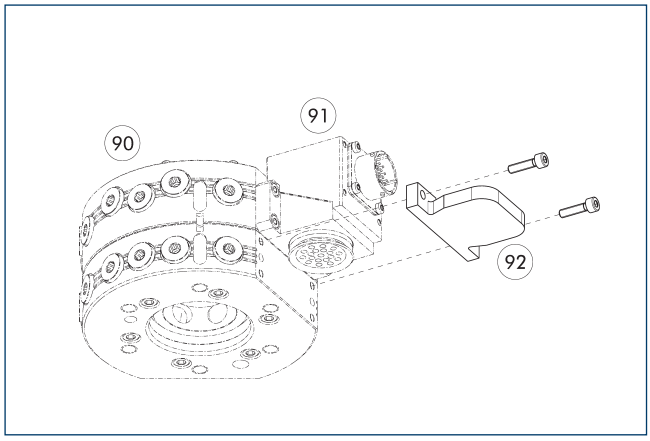

90 Automatic tool changers CPS
91 Optional module COS master
92 Cover COS JPC-A

Description	ID	Suitable for
Cover		
COS JPC-A	1584095	For many electrical modules with screw-on pattern J

Cable connector

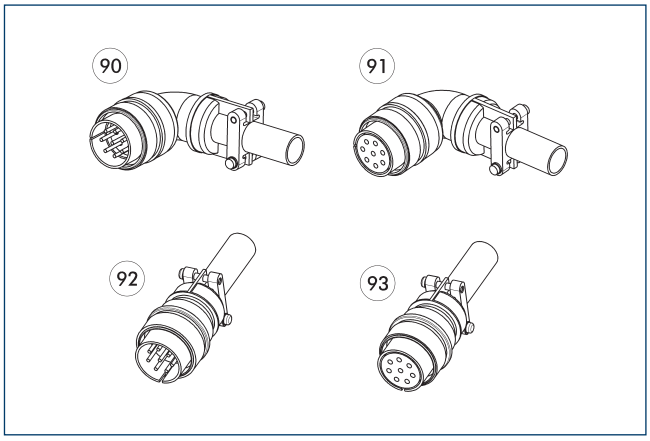

90 Angled plug
91 Angled socket
92 Straight plug
93 Straight socket

Description	ID	
Angled cable connector, robot-side		
KAS-19G-K-90	0301236	
Angled cable connector, tool-side		
KAS-19G-A-90	0301237	
Straight cable connector, robot-side		
KAS-19G-K-0	0301232	
Straight cable connector, tool-side		
KAS-19G-A-0	0301233	

ⓘ Detailed information and further cable connectors can be found at schunk.com

COS MT8

Feed-through modules

Derating in continuous operation

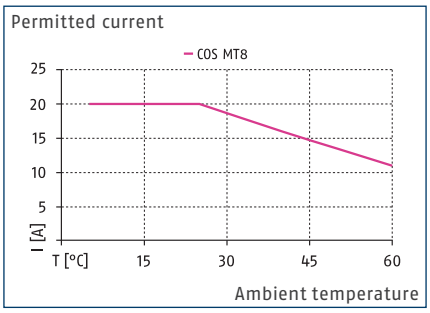

Derating in cyclical operation

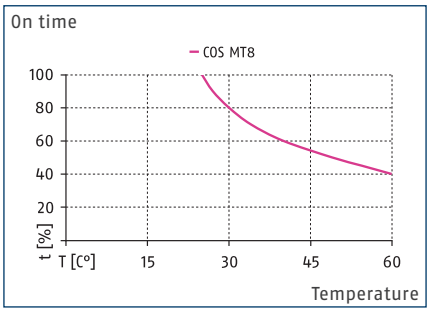

Technical data

Description		COS MT8-K	COS MT8L-K	COS MT8-A	COS MT8L-A
ID		1586685	1586689	1586684	1586687
Suitable on		Change head	Change head	Tool	Tool
Screw connection diagram		J	J	J	J
Transmission type		Power	Power	Power	Power
Weight	[kg]	0.31	0.31	0.33	0.33
Min./max. ambient temperature	[°C]	5/60	5/60	5/60	5/60
Protection class IP		IP64 (only in a coupled state)	IP64 (only in a coupled state)	IP64 (only in a coupled state)	IP64 (only in a coupled state)
Number of pin contacts		8	8	8	8
Nominal current	[A]	20	20	20	20
Alternating voltage	[V AC]	450	450	450	450
Direct voltage	[V DC]	700	700	700	700
Electrical connection		Amphenol MS threaded cap connector, 8 pins	Amphenol MS threaded cap connector, 8 pins	Amphenol MS threaded cap socket, 8 pins	Amphenol MS threaded cap socket, 8 pins
Electrical connection outlet		tangential	tangential	tangential	tangential
Special properties		Right cable outlet	Left cable outlet	Right cable outlet	Left cable outlet

Derating in continuous operation: the permitted current depends on the ambient temperature. Exceeding this temperature can lead to overheating and possible product damage.

Derating in cyclical operation: the time-dependent transfer of the maximum rated current (20 A, 10-minute basis) depends on the duty cycle (t). Exceeding the temperature limits can lead to overheating and thus to product damage.

Combination COS MT8-K and COS MT8-A

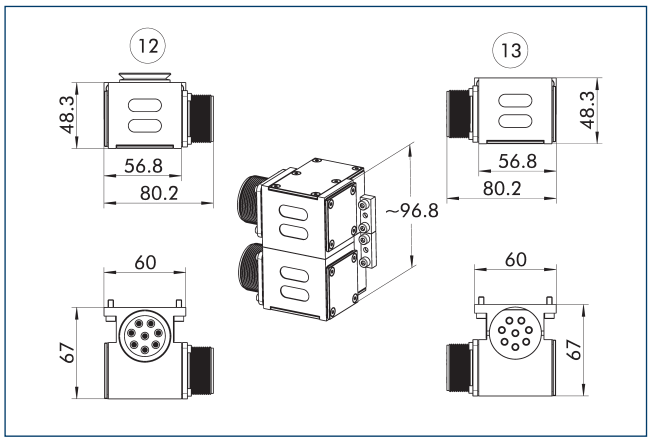

12 Master side
13 Adapter side

ⓘ The illustration shows the combination of feed-through modules with tangential cable outlet on the right. This variant is also available with a tangential cable outlet on the left.

Pin assignment for COS MT8-K and COS MT8-A or COS MT8L-K and MT8L-A

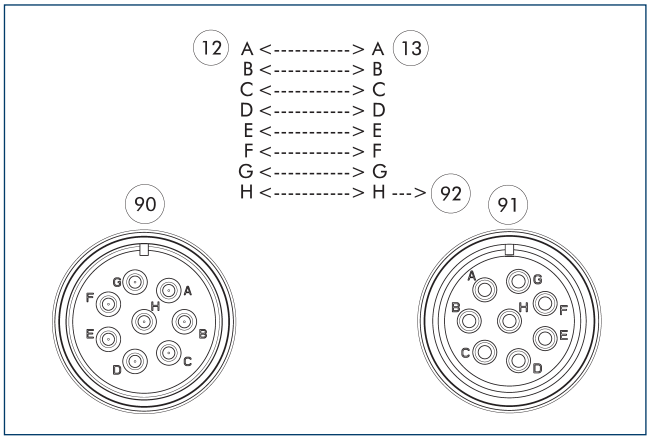

12 Master side
13 Adapter side
90 Amphenol MS threaded cap connector, 8 pins
91 Amphenol MS threaded cap socket, 8 pins
92 leading pin

Cover COS JPC-A

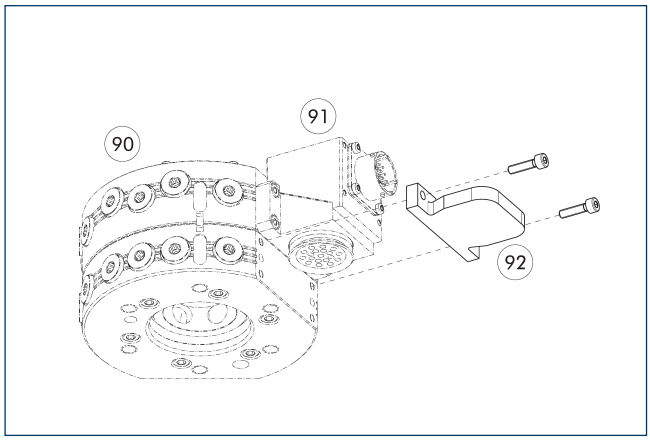

90 Automatic tool changers CPS
91 Optional module COS master
92 Cover COS JPC-A

Description	ID	Suitable for
Cover		
COS JPC-A	1584095	For many electrical modules with screw-on pattern J

Cable connector

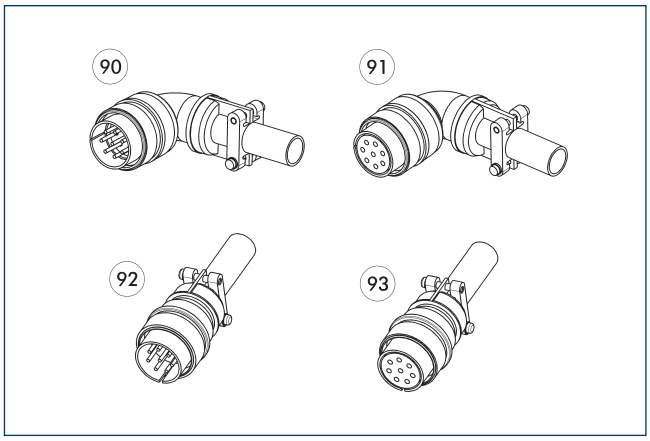

90 Angled plug
91 Angled socket
92 Straight plug
93 Straight socket

Description	ID	
Angled cable connector, robot-side		
KAS-08G-K-90	0301270	
Angled cable connector, tool-side		
KAS-08G-A-90	0301271	
Straight cable connector, robot-side		
KAS-08G-K-0	0301268	
Straight cable connector, tool-side		
KAS-08G-A-0	0301269	

ⓘ Detailed information and further cable connectors can be found at schunk.com

COS REP10

Feed-through modules

Technical data

Description		COS REP10-K	COS REP10-KIT-K	COS REP10-A	COS REP10-KIT-A
ID		1586665	1586668	1586664	1586667
Suitable on		Change head	Change head	Tool	Tool
Screw connection diagram		J	J	J	J
Transmission type		Servo	Servo	Servo	Servo
Weight	[kg]	0.14	0.14	0.14	0.14
Min./max. ambient temperature	[°C]	5/60	5/60	5/60	5/60
Protection class IP		IP64 (only in a coupled state)	IP64 (only in a coupled state)	IP64 (only in a coupled state)	IP64 (only in a coupled state)
Number of pin contacts		6	6	6	6
Nominal current	[A]	5	5	5	5
Alternating voltage	[V AC]	48	500	48	500
Direct voltage	[V DC]	74	700	74	700
Electrical connection		M23 connector, 9-pin		M23 socket, 9-pin	
Outlet connection		radial		radial	
Number of pin contacts		3	3	3	3
Nominal current	[A]	15	15	15	15
Alternating voltage	[V AC]	48	500	48	500
Direct voltage	[V DC]	74	700	74	700
Electrical connection			M16 cable gland for Ø 5 – 10 mm		M16 cable gland for Ø 5 – 10 mm
Special properties		Shielding of connector housing is via pinblock, electric circuits (signal & power) are galvanically separated.	Shielding of connector housing is via pinblock, electric circuits (signal & power) are galvanically separated. The KIT has an additional attachment with various outlet options. Direct soldering of the cable strands to the pin block.	Shielding of connector housing is via pinblock, electric circuits (signal & power) are galvanically separated.	Shielding of connector housing is via pinblock, electric circuits (signal & power) are galvanically separated. The KIT has an additional attachment with various outlet options. Direct soldering of the cable strands to the pin block.

Combination COS REP10-K and COS REP10-A

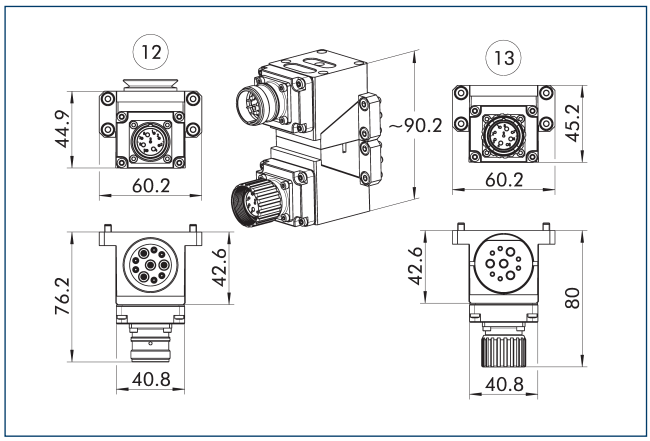

12 Master side
13 Adapter side

Combination COS REP10-Kit-K and COS REP10-Kit-A

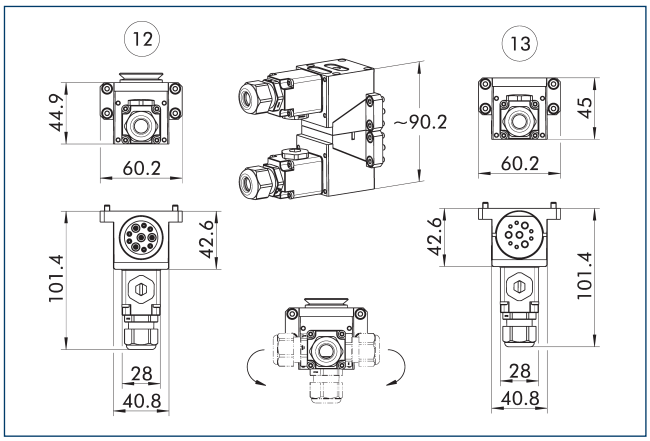

12 Master side
13 Adapter side

Pin assignment for COS REP10-K with COS REP10-A

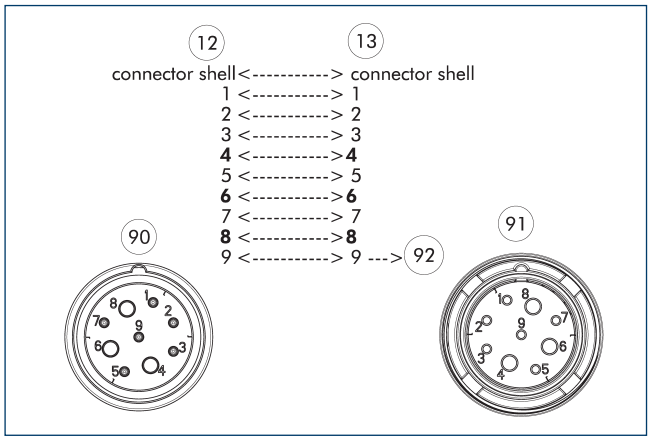

12 Master side
13 Adapter side
90 M23 connector, 9-pin
91 M23 socket, 9-pin
92 leading pin

Cover COS JPC-A

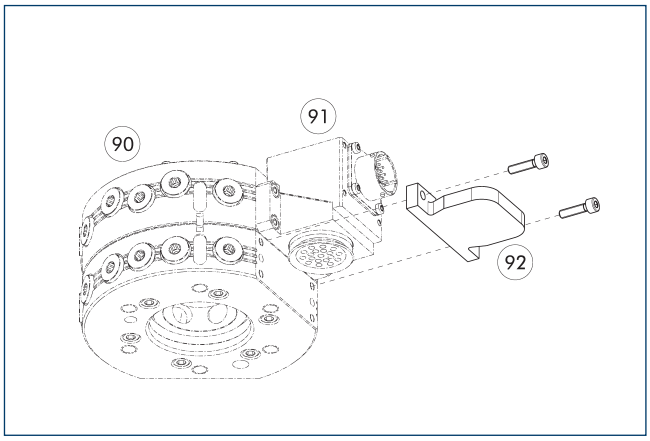

90 Automatic tool changers CPS
91 Optional module COS master
92 Cover COS JPC-A

Description	ID	Suitable for
Cover		
COS JPC-A	1584095	For many electrical modules with screw-on pattern J

Cable plug/cable extension

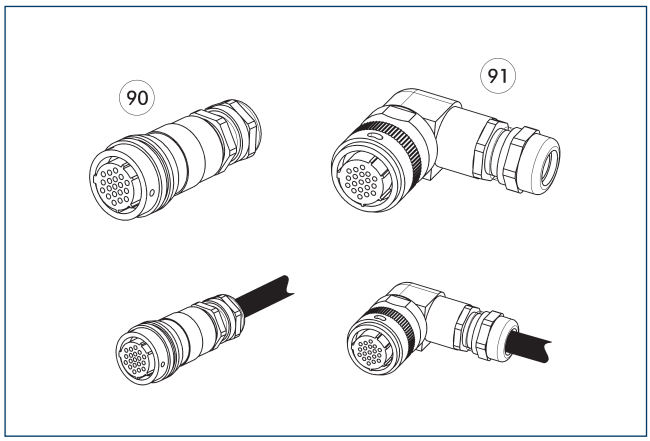

90 Plug/socket straight

91 Connector/angled socket

Other cable lengths on request.

Description	ID	
Angled cable connector		
KAS-REP10-K-90	30081323	
Straight cable connector		
KAS-REP10-A-0	1644046	

COS RES10B

Feed-through modules

Technical data

Description		COS RES10B-K	COS RES10B-A
ID		1586671	1586669
Suitable on		Change head	Tool
Screw connection diagram		J	J
Transmission type		Servo	Servo
Weight	[kg]	0.15	0.14
Min./max. ambient temperature	[°C]	5/60	5/60
Protection class IP		IP64 (only in a coupled state)	IP64 (only in a coupled state)
Number of pin contacts		9	9
Nominal current	[A]	3.5	3.5
Alternating voltage	[V AC]	160	160
Direct voltage	[V DC]	160	160
Electrical connection		M23 connector, 12-pin	M23 socket, 12-pin
Outlet connection		radial	radial
Special properties		Four twisted wire pairs, shielding of connector housing is via pinblock.	Four twisted wire pairs, shielding of connector housing is via pinblock.

Combination COS RES10B-K and COS RES10B-A

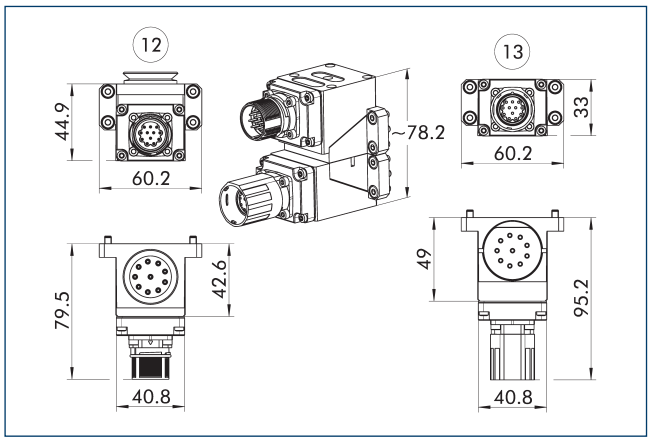

12 Master side

13 Adapter side

Pin assignment for COS RES10B-K with COS RES10B-A

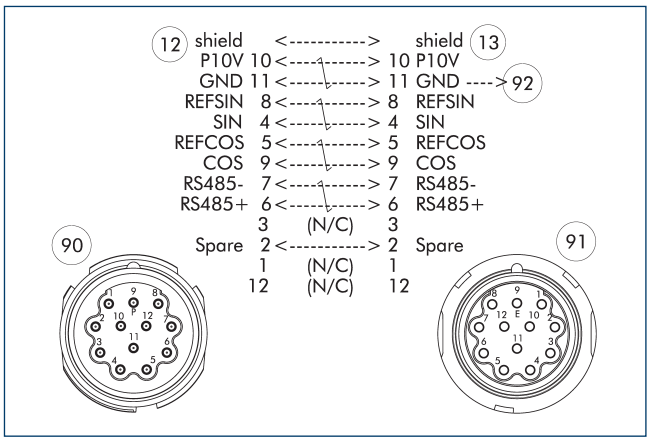

12 Master side

13 Adapter side

90 JAE interface

91 JAE interface

92 leading pin

Cover COS JPC-A

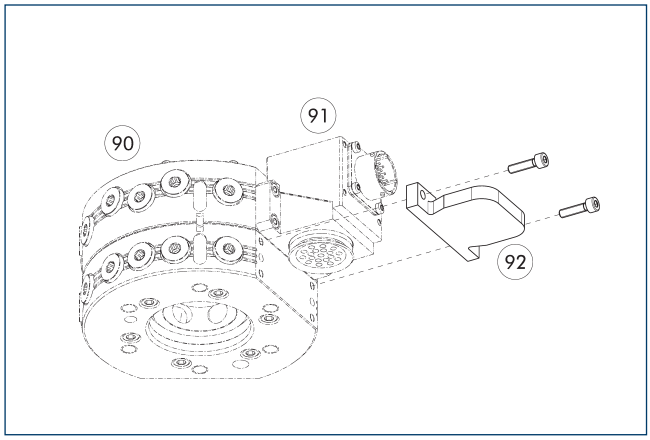

90 Automatic tool changers CPS

91 Optional module COS master

92 Cover COS JPC-A

Description	ID	Suitable for
Cover		
COS JPC-A	1584095	For many electrical modules with screw-on pattern J

Cable plug/cable extension

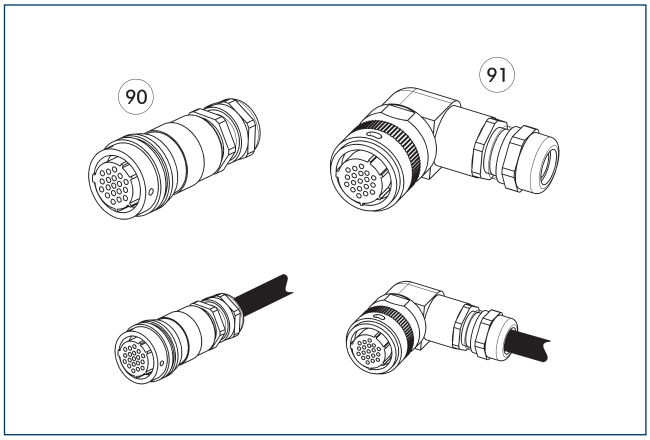

90 Plug/socket straight

91 Connector/angled socket

Other cable lengths on request.

Description	ID	
Angled cable connector		
KBU-7/8-W 4P	1365073	
KST-7/8-W 4P	1365072	
Straight cable connector		
KAS-12G-A-0	1344402	
KAS-12G-K-0	1344401	

COS EN110S1

Feed-through modules

Technical data

Description		COS EN110S1-K	COS EN110S1-A
ID		1586500	1586488
Suitable on		Change head	Tool
Screw connection diagram		L over adapter plate	L over adapter plate
Transmission type		Signal	Signal
Weight	[kg]	0.66	0.67
Min./max. ambient temperature	[°C]	5/60	5/60
Protection class IP		IP64 (only in a coupled state)	IP64 (only in a coupled state)
Number of pin contacts		19	19
Nominal current	[A]	5	5
Alternating voltage	[V AC]	250	250
Direct voltage	[V DC]	250	250
Electrical connection		Implementation by the customer	Implementation by the customer
Number of pin contacts		7	7
Nominal current	[A]	13	13
Alternating voltage	[V AC]	450	450
Direct voltage	[V DC]	700	700
Special properties		Direct soldering of the cable strands to the pin blocks	Direct soldering of the cable strands to the pin blocks

ⓘ The adapter plates COS Z56-K-L/3EN, ID 1585129 (robot side), or COS Z56-A-L/3EN, ID 1585144 (tool side), are required for the L-screw connection diagram. Up to three EN110S1 modules can be fastened to it.

Combination of COS EN110S1-K and COS EN110S1-A

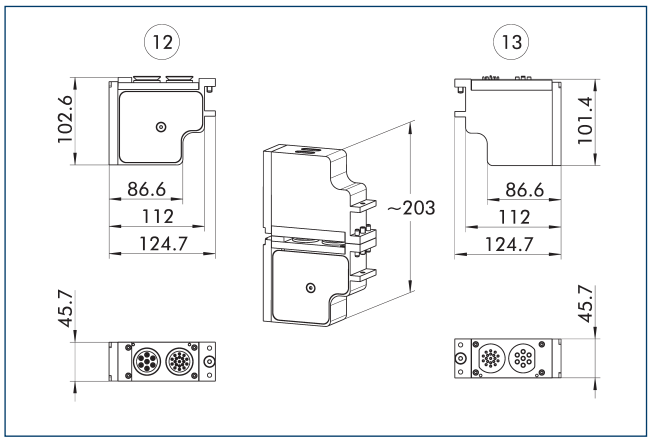

12 Master side

13 Adapter side

COS KE7

Feed-through modules

Technical data

Description		COS KE7-K	COS KE7-A
ID		1586422	1586420
Suitable on		Change head	Tool
Screw connection diagram		K	K
Transmission type		Communication	Communication
Weight	[kg]	0.15	0.14
Min./max. ambient temperature	[°C]	5/60	5/60
Protection class IP		IP64 (only in a coupled state)	IP64 (only in a coupled state)
Bus system		EtherNet	EtherNet
Transmission Speed	[Mbit/s]	100	100
Number of pin contacts		3	3
Nominal current	[A]	4	4
Alternating voltage	[V AC]	125	125
Direct voltage	[V DC]	125	125
Electrical connection		M12, Female D-Coded connector	M12, Female D-Coded connector
Outlet connection		radial	radial
Electrical connection		M8 connector, A-coded, 3-pin	M8 socket, A-coded, 3-pin
Electrical connection outlet		radial	radial
Special properties		Supports Power-over-Ethernet (PoE).	Supports Power-over-Ethernet (PoE).

Combination COS KE7-K and COS KE7-A

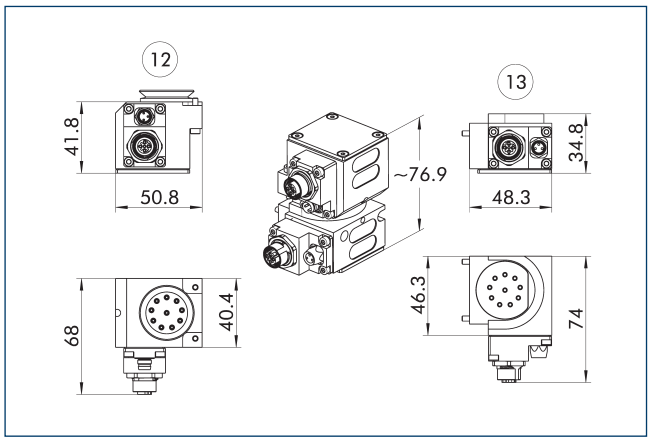

(12) Master side
(13) Adapter side

Pin assignment for COS KE7-K with COS KE7-A

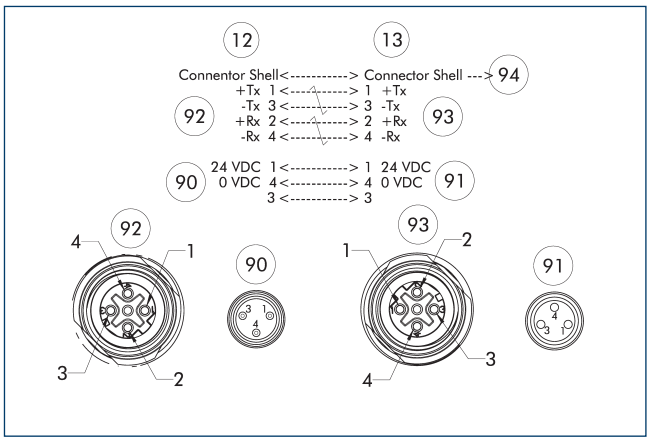

(12) Master side
(13) Adapter side
(90) M8 connector, A-coded, 3-pin
(91) M8 socket, A-coded, 3-pin
(92) M12, Female D-Coded connector
(93) M12, Female D-Coded connector
(94) leading pin

Cover COS KPC-A

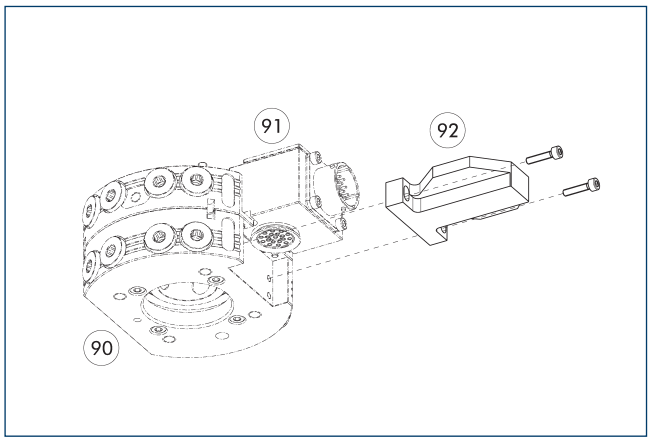

(90) Automatic tool changers CPS
(91) Optional module COS master
(92) Cover COS KPC-A

Description	ID	Suitable for
Cover		
COS KPC-A	1585142	Many electrical modules with screw-on pattern K

Cable plug/cable extension

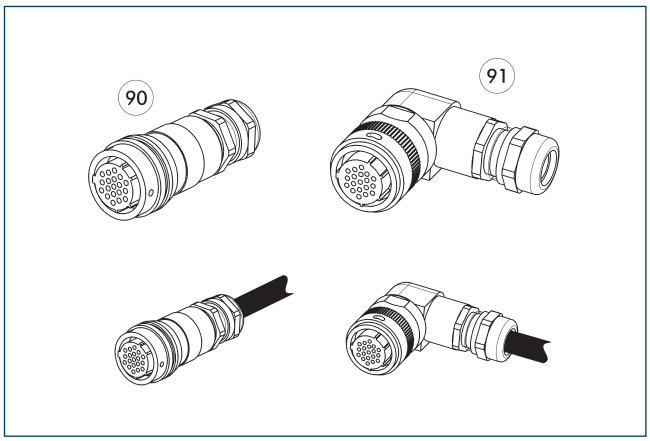

(90) Plug/socket straight
(91) Connector/angled socket

Other cable lengths on request.

Description	ID	
Angled cable connector		
KBU-7/8-W 4P	1365073	
KST-7/8-W 4P	1365072	
KST-M12-W 4DP	1416610	

COS KE8

Feed-through modules

Technical data

Description		COS KE8-K	COS KE8-A
ID		1586426	1586425
Suitable on		Change head	Tool
Screw connection diagram		K	K
Transmission type		Communication	Communication
Weight	[kg]	0.15	0.14
Min./max. ambient temperature	[°C]	5/60	5/60
Protection class IP		IP64 (only in a coupled state)	IP64 (only in a coupled state)
Bus system		EtherNet	EtherNet
Transmission Speed	[Mbit/s]	100	100
Nominal current	[A]	4	4
Alternating voltage	[V AC]	125	125
Direct voltage	[V DC]	125	125
Electrical connection		M12, Female D-Coded connector	M12, Female D-Coded connector
Outlet connection		radial	radial
Electrical connection		M8 connector, A-coded, 4-pin	M8 socket, A-coded, 4-pin
Electrical connection outlet		radial	radial
Special properties		Supports Power-over-Ethernet (PoE).	Supports Power-over-Ethernet (PoE).

Combination of COS KE8-K and COS KE8-A

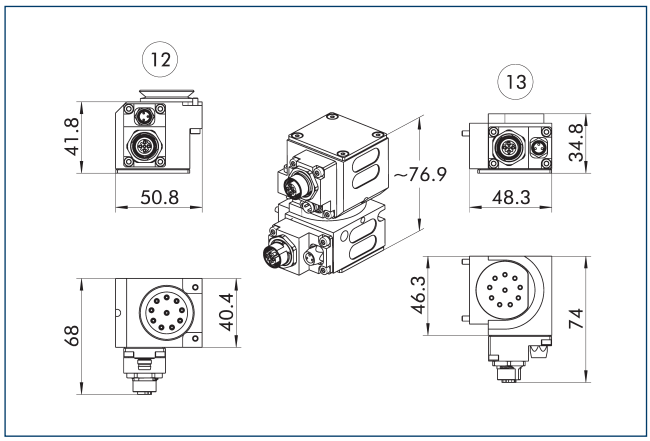

(12) Master side
(13) Adapter side

Pin assignment for COS KE8-K with COS KE8-A

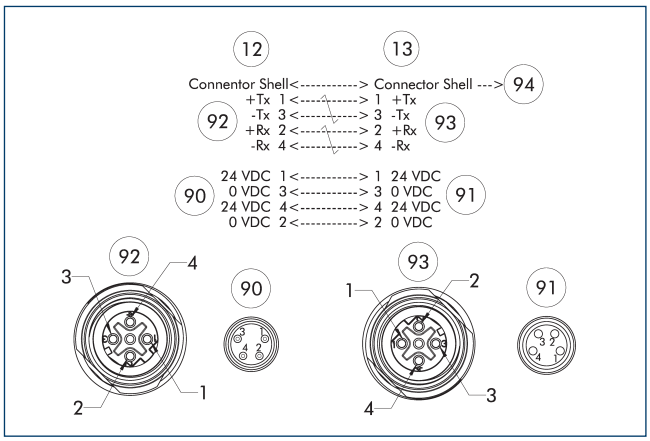

(12) Master side
(13) Adapter side
(90) M8 connector, A-coded, 4-pin
(91) M8 socket, A-coded, 4-pin
(92) M12, Female D-Coded connector
(93) M12, Female D-Coded connector
(94) leading pin

Cover COS KPC-A

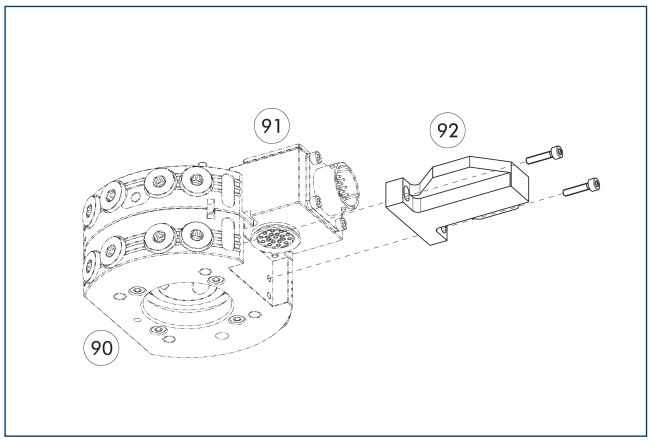

(90) Automatic tool changers CPS
(91) Optional module COS master
(92) Cover COS KPC-A

Description	ID	Suitable for
Cover		
COS KPC-A	1585142	Many electrical modules with screw-on pattern K

Cable plug/cable extension

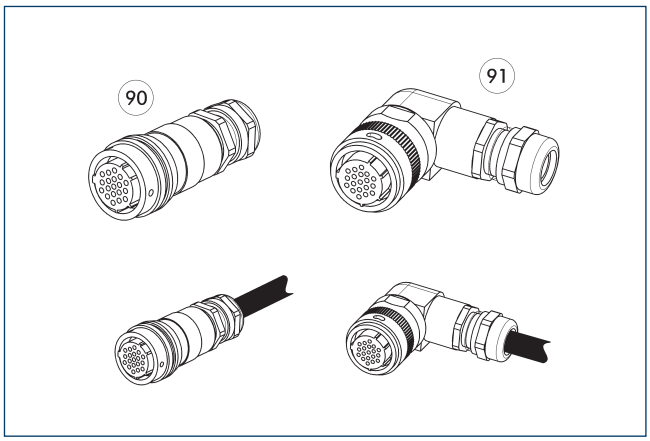

(90) Plug/socket straight
(91) Connector/angled socket

Other cable lengths on request.

Description	ID	
Angled cable connector		
KST-M12-W 4DP	1416610	
Straight cable connector		
KST-M12-G 4DP	9965967	
KST-M8-G 4AP	9960108	

Plug-in connector power supply/signals

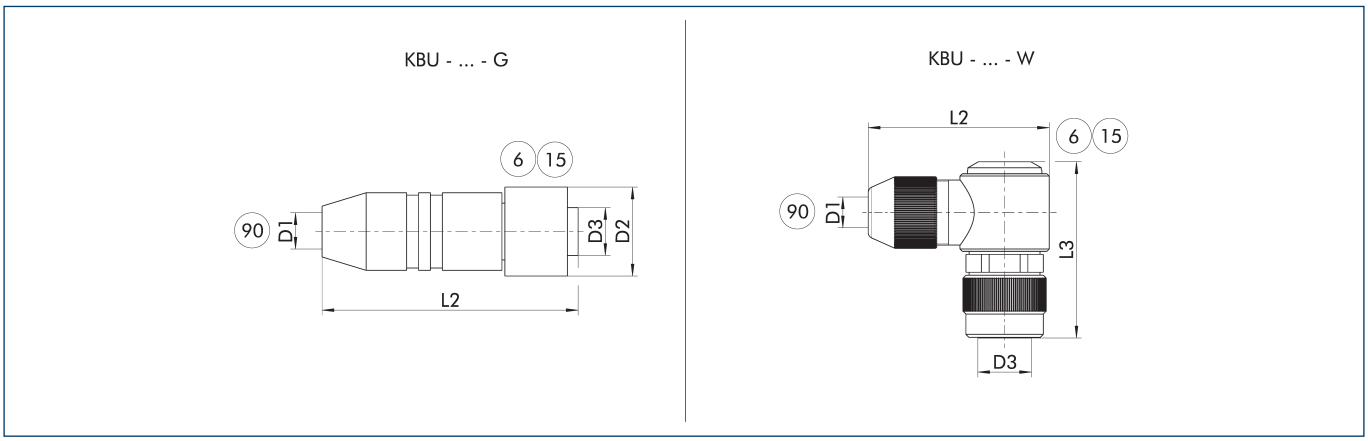

KBU – ... – G Socket with straight outlet
KBU – ... – W Socket with angular outlet

(6) Connection module side
(15) Socket
(90) D1 – max. diameter connection cable

The plug connectors are used to connect the SCHUNK products to the voltage supply. A customer cable can be used for this. The individual wire strands can be soldered to the solder pins of the connector.

Description	ID	D1 (max.)	L2	D2	L3	D3
		[mm]	[mm]	[mm]	[mm]	
Cable connector						
KBU-M8-G 4P	1506418	5	37	12		M8
KBU-M8-W 4P	1506422	5	25		28	M8

ⓘ For the connection cable, a cross-section for each individual wire strand of 0.25 mm² is recommended. Please refer to the product documentation for information about max. cable length and min. wire cross section.

Power supply plug-in connector

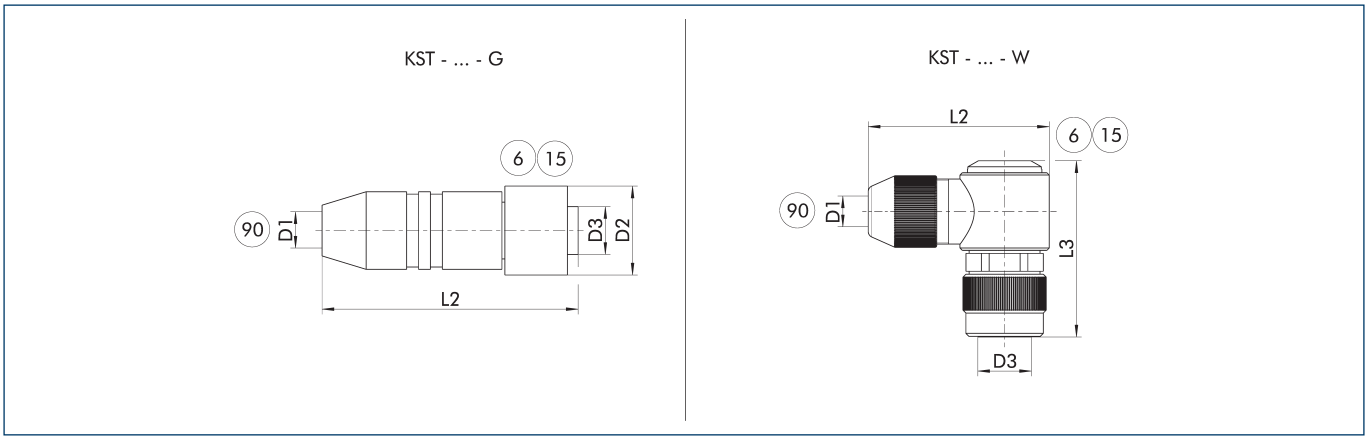

KST – ... – G Connection plug with straight outlet
KST – ... – W Connection plug with angular outlet

(6) Connection module side
(15) Socket
(90) D1 – max. diameter connection cable

The plug connectors are used to connect the SCHUNK product to the voltage supply. A customer cable can be used for this. The individual wire strands are clamped using screw connections in the plug connector.

Description	ID	D1 (max.)	L2	D2	L3	D3
		[mm]	[mm]	[mm]	[mm]	
Cable connector						
KST-M8-W 4P	1451015	5	41.9	13	32.5	M8

ⓘ For the connection cable, a cross-section for each individual wire strand of 0.14 mm² is recommended. Please refer to the product documentation for information about max. cable length and min. wire cross section.

COS RD5

Feed-through modules

Technical data

Description		COS RD5-K	COS RD5-A
ID		1586650	1586639
Suitable on		Change head	Tool
Screw connection diagram		J	J
Transmission type		Communication	Communication
Weight	[kg]	0.1	0.1
Min./max. ambient temperature	[°C]	5/60	5/60
Protection class IP		IP64 (only in a coupled state)	IP64 (only in a coupled state)
Bus system		DeviceNet, IO-Link Class B	DeviceNet, IO-Link Class B
Electrical connection		M12 connector, A-coded	M12 socket, A-coded
Outlet connection		radial	radial

Combination COS RD5-K and COS RD5-A

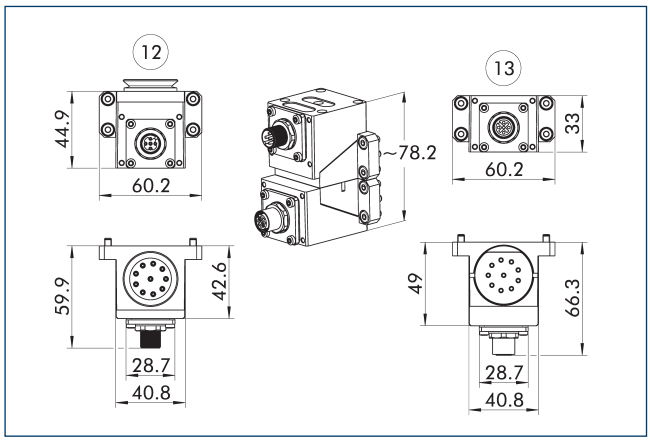

(12) Master side
(13) Adapter side

Pin assignment for COS RD5-K and COS RD5-A

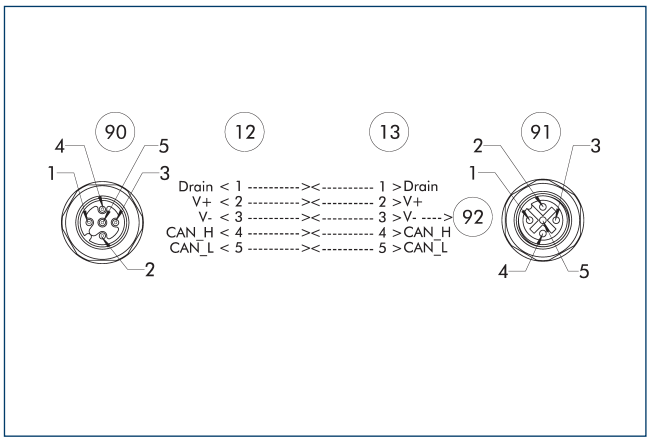

(12) Master side
(13) Adapter side
(90) M12 connector, A-coded
(91) M12 socket, A-coded
(92) leading pin

Cover COS JPC-A

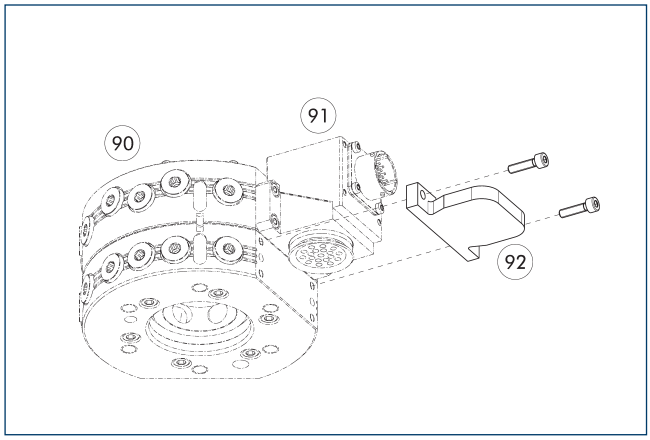

(90) Automatic tool changers CPS
(91) Optional module COS master
(92) Cover COS JPC-A

Description	ID	Suitable for
Cover		
COS JPC-A	1584095	For many electrical modules with screw-on pattern J

COS RE10

Feed-through modules

Technical data

Description		COS RE10-K	COS RE10-A
ID		1586653	1586652
Suitable on		Change head	Tool
Screw connection diagram		J	J
Transmission type		Communication	Communication
Weight	[kg]	0.17	0.16
Min./max. ambient temperature	[°C]	5/60	5/60
Protection class IP		IP64 (only in a coupled state)	IP64 (only in a coupled state)
Bus system		EtherNet	EtherNet
Transmission Speed	[Mbit/s]	100	100
Nominal current	[A]	1	1
Alternating voltage	[V AC]	48	48
Direct voltage	[V DC]	48	48
Electrical connection		AIDA PushPull-RJ45	AIDA PushPull-RJ45
Outlet connection		radial	radial
Special properties		Supports Power-over-Ethernet (PoE) and complies with CAT5e requirements.	Supports Power-over-Ethernet (PoE) and complies with CAT5e requirements.

Combination COS RE10-K and COS RE10-A

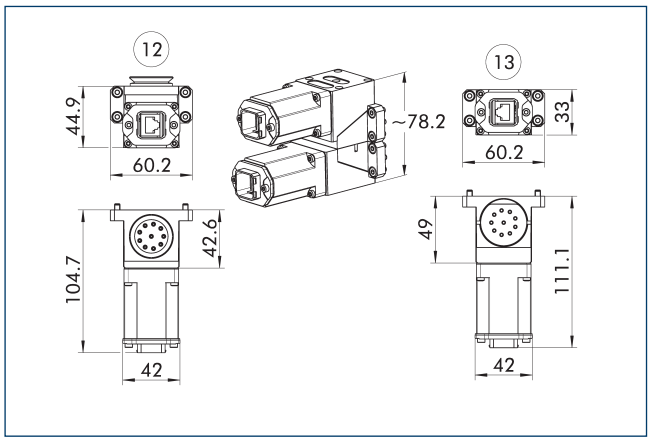

12 Master side
13 Adapter side

Pin assignment for COS RE10-K with COS RE10-A

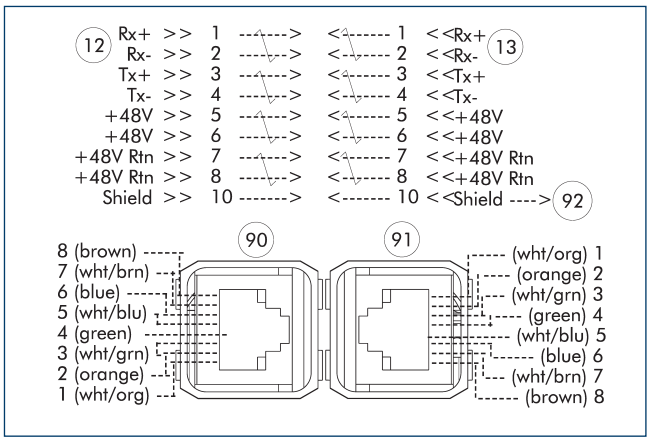

12 Master side
13 Adapter side
90 AIDA PushPull-RJ45
91 AIDA PushPull-RJ45
92 leading pin

Cover COS JPC-A

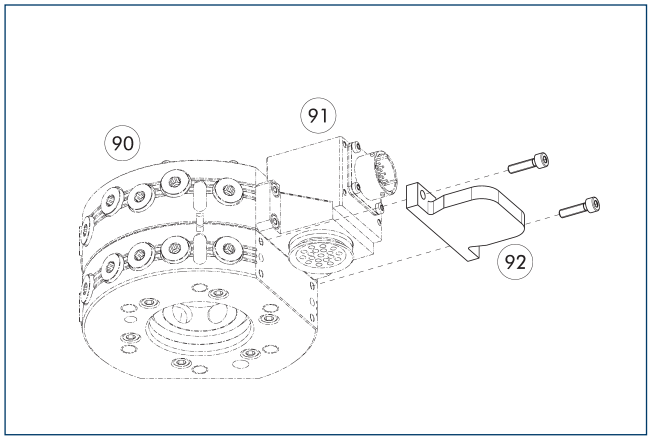

90 Automatic tool changers CPS
91 Optional module COS master
92 Cover COS JPC-A

Description	ID	Suitable for
Cover		
COS JPC-A	1584095	For many electrical modules with screw-on pattern J

COS RE5

Feed-through modules

Technical data

Description		COS RE5-K	COS RE5-A
ID		1586656	1586654
Suitable on		Change head	Tool
Screw connection diagram		J	J
Transmission type		Communication	Communication
Weight	[kg]	0.12	0.11
Min./max. ambient temperature	[°C]	5/60	5/60
Protection class IP		IP64 (only in a coupled state)	IP64 (only in a coupled state)
Bus system		EtherNet	EtherNet
Transmission Speed	[Mbit/s]	100	100
Nominal current	[A]	2	2
Alternating voltage	[V AC]	60	60
Direct voltage	[V DC]	60	60
Electrical connection		M12, Female D-Coded connector	M12, Female D-Coded connector
Outlet connection		radial	radial
Special properties		Supports Power-over-Ethernet (PoE).	Supports Power-over-Ethernet (PoE).

Combination COS RE5-K and COS RE5-A

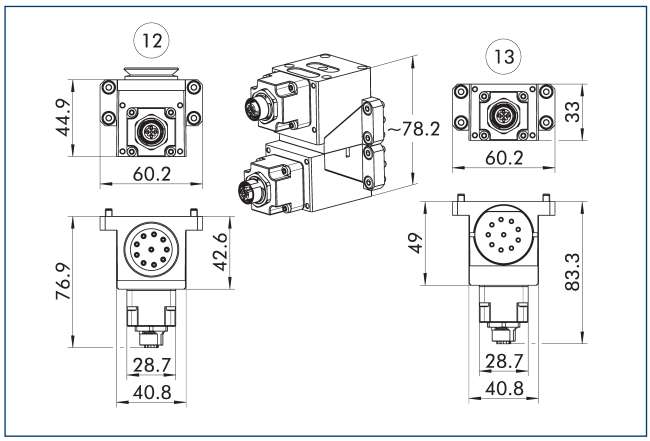

(12) Master side
(13) Adapter side

Pin assignment for COS RE5-K with COS RE5-A

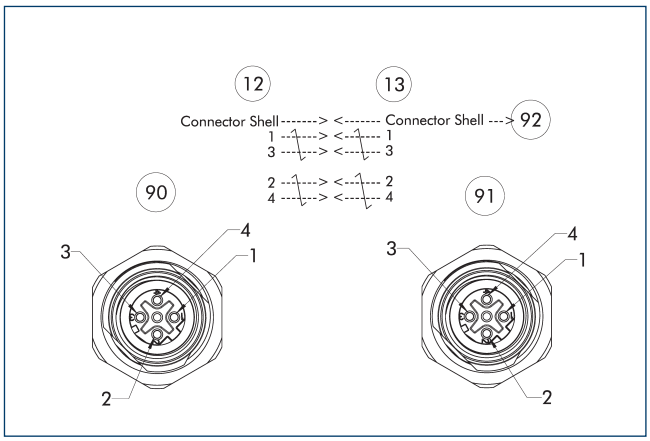

(12) Master side
(13) Adapter side
(90) M12, Female D-Coded connector
(91) M12, Female D-Coded connector
(92) leading pin

Cover COS JPC-A

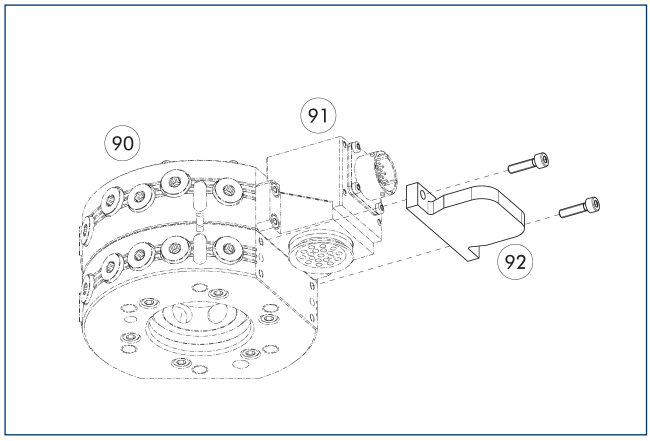

(90) Automatic tool changers CPS
(91) Optional module COS master
(92) Cover COS JPC-A

Description	ID	Suitable for
Cover		
COS JPC-A	1584095	For many electrical modules with screw-on pattern J

Cable plug/cable extension

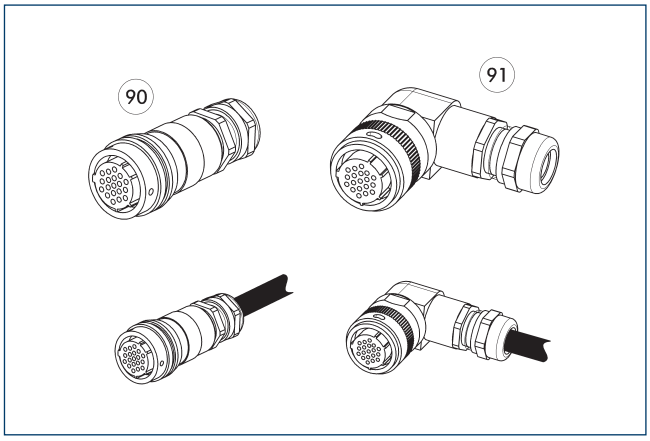

(90) Plug/socket straight
(91) Connector/angled socket

Other cable lengths on request.

Description	ID	
Straight cable connector		
KST-M12-G 4DP	9965967	

COS RE8

Feed-through modules

Technical data

Description		COS RE8-K	COS RE8-A
ID		1586660	1586659
Suitable on		Change head	Tool
Screw connection diagram		J	J
Transmission type		Communication	Communication
Weight	[kg]	0.15	0.14
Min./max. ambient temperature	[°C]	5/60	5/60
Protection class IP		IP64 (only in a coupled state)	IP64 (only in a coupled state)
Bus system		EtherNet	EtherNet
Transmission Speed	[Mbit/s]	1000	1000
Number of pin contacts		8	8
Nominal current	[A]	0.5	0.5
Alternating voltage	[V AC]	48	48
Direct voltage	[V DC]	60	60
Electrical connection		M12 socket, X-coded	M12 socket, X-coded
Outlet connection		radial	radial
Special properties		Supports Power-over-Ethernet (PoE) and complies with CAT5e requirements.	Supports Power-over-Ethernet (PoE) and complies with CAT5e requirements.

Combination COS RE8-K and COS RE8-A

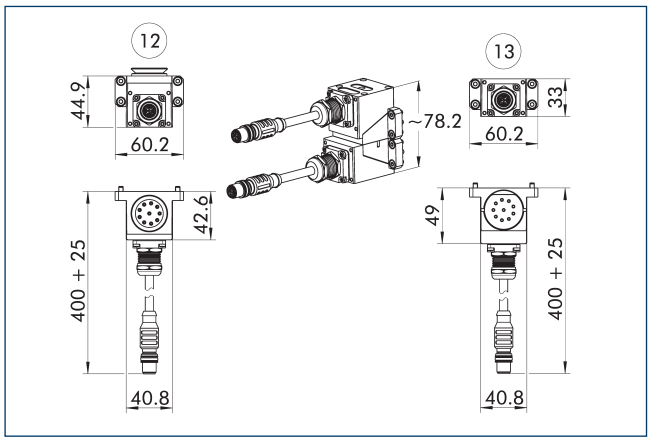

(12) Master side
(13) Adapter side

Pin assignment for COS RE8-K with COS RE8-A

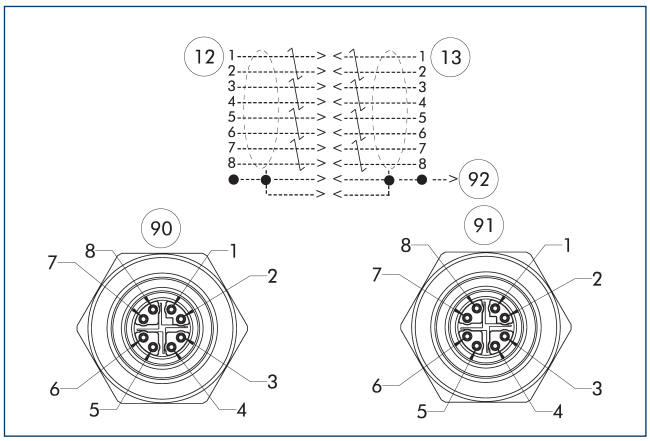

(12) Master side
(13) Adapter side
(90) M12 socket, X-coded
(91) M12 socket, X-coded
(92) leading pin

Cover COS JPC-A

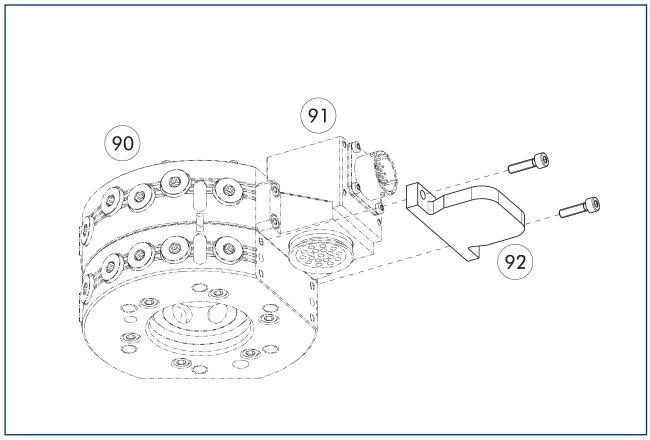

(90) Automatic tool changers CPS
(91) Optional module COS master
(92) Cover COS JPC-A

Description	ID	Suitable for
Cover		
COS JPC-A	1584095	For many electrical modules with screw-on pattern J

COS TD

Feed-through modules

Technical data

Description		COS TD-K	COS TD-A
ID		1586732	1586730
Suitable on		Change head	Tool
Screw connection diagram		J	J
Transmission type		Communication	Communication
Weight	[kg]	0.48	0.36
Min./max. ambient temperature	[°C]	5/60	5/60
Protection class IP		IP64 (only in a coupled state)	IP64 (only in a coupled state)
Bus system		DeviceNet	DeviceNet
Number of pin contacts		4	4
Nominal current	[A]	5	5
Alternating voltage	[V AC]	24	24
Direct voltage	[V DC]	24	24
Electrical connection		7/8" connector, 5-pin	7/8" socket, 5-pin
Outlet connection		radial	radial
Electrical connection		7/8" connector, 4-pin	7/8" socket, 4-pin
Electrical connection outlet		radial	radial

ⓘ For mounting on CPS 040 and CPS 041, an additional spacer (ID 1584116) is required.

Combination COS TD-K and COS TD-A

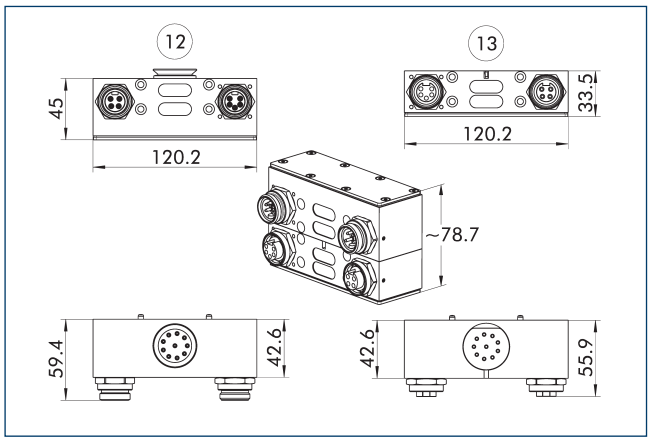

12 Master side
13 Adapter side

Cover COS JPC-A

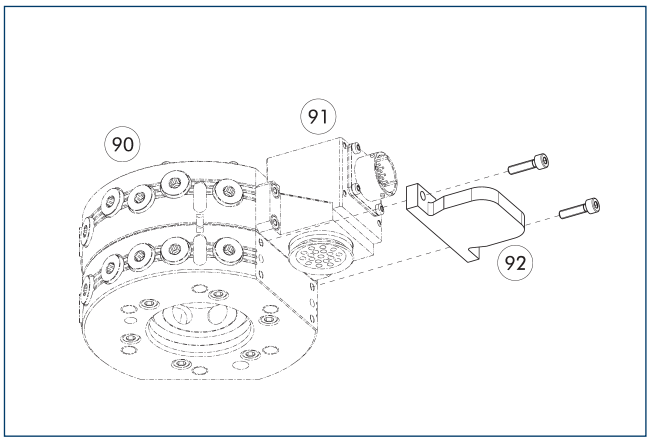

90 Automatic tool changers CPS
91 Optional module COS master
92 Cover COS JPC-A

Description	ID	Suitable for
Cover		
COS JPC-A	1584095	For many electrical modules with screw-on pattern J

Cable plug/cable extension

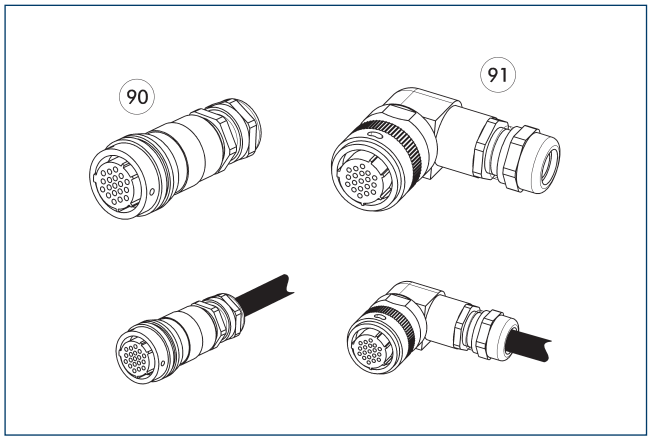

90 Plug/socket straight
91 Connector/angled socket

Other cable lengths on request.

Description	ID	
Straight cable connector		
KBU-7/8-G 4P	9957560	
KBU-7/8-G 5P	9957558	
KST-7/8-G 4P	9957561	
KST-7/8-G 5P	9957559	

COS TE

Feed-through modules

Technical data

Description		COS TE-K	COS TE-A
ID		1586736	1586735
Suitable on		Change head	Tool
Screw connection diagram		J	J
Transmission type		Communication	Communication
Weight	[kg]	0.46	0.46
Min./max. ambient temperature	[°C]	5/60	5/60
Protection class IP		IP64 (only in a coupled state)	IP64 (only in a coupled state)
Bus system		PROFINET, EtherNet	PROFINET, EtherNet
Transmission Speed	[Mbit/s]	10/100	10/100
Number of pin contacts		4	4
Nominal current	[A]	5	5
Alternating voltage	[V AC]	250	250
Direct voltage	[V DC]	250	250
Electrical connection		M12, Female D-Coded connector	M12, Female D-Coded connector
Outlet connection		radial	radial
Electrical connection		7/8" connector, 4-pin	7/8" socket, 4-pin
Electrical connection outlet		radial	radial
Special properties		Simultaneous feed-through of PROFINET/EtherNet and 4-pin voltage supply.	Simultaneous feed-through of PROFINET/EtherNet and 4-pin voltage supply.

ⓘ For mounting on CPS 040 and CPS 041, an additional spacer (ID 1584116) is required.

Combination COS TE-K and COS TE-A

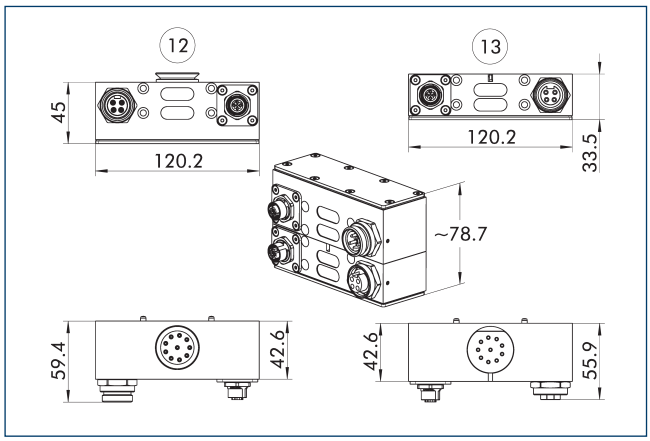

(12) Master side
(13) Adapter side

Pin assignment for COS TE-K with COS TE-A

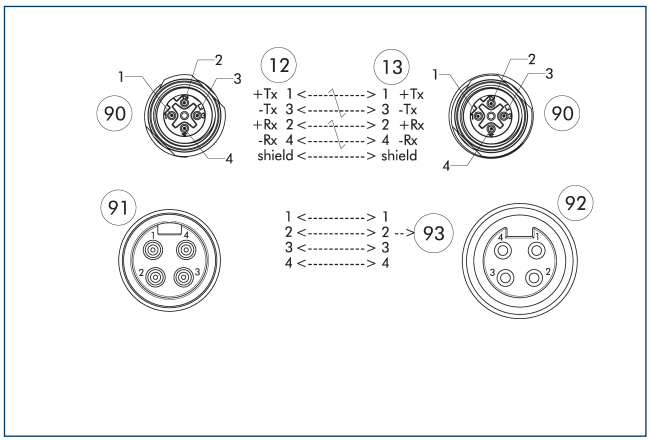

(12) Master side
(13) Adapter side
(90) M12, Female D-Coded connector
(91) 7/8" connector, 5-pin
(92) 7/8" socket, 5-pin
(93) leading pin

Cover COS JPC-A

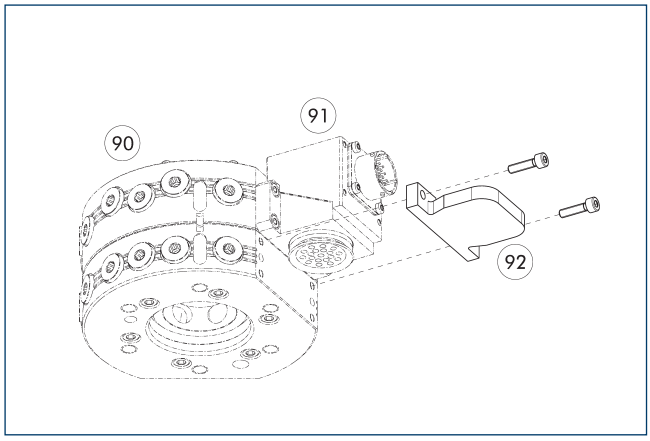

(90) Automatic tool changers CPS
(91) Optional module COS master
(92) Cover COS JPC-A

Description	ID	Suitable for
Cover		
COS JPC-A	1584095	For many electrical modules with screw-on pattern J

Cable plug/cable extension

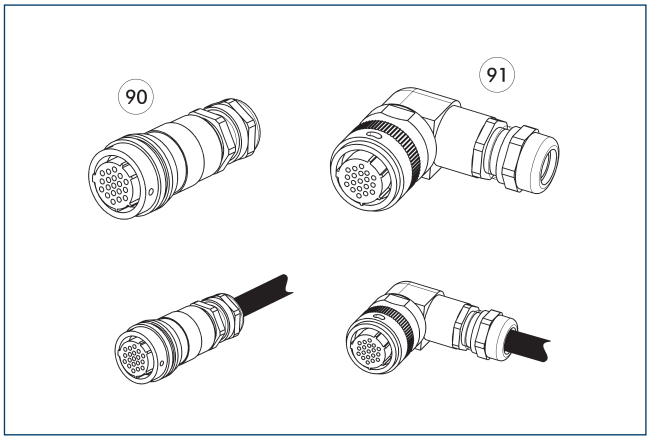

(90) Plug/socket straight
(91) Connector/angled socket

Other cable lengths on request.

Description	ID	
Straight cable connector		
KBU-7/8-G 4P	9957560	
KST-7/8-G 4P	9957561	
KST-M12-G 4DP	9965967	

COS TP

Feed-through modules

Technical data

Description		COS TP-K	COS TP-A
ID		1586740	1586738
Suitable on		Change head	Tool
Screw connection diagram		J	J
Transmission type		Communication	Communication
Weight	[kg]	0.46	0.35
Min./max. ambient temperature	[°C]	5/60	5/60
Protection class IP		IP64 (only in a coupled state)	IP64 (only in a coupled state)
Bus system		PROFINET, EtherNet	PROFINET, EtherNet
Transmission Speed	[Mbit/s]	10/100	10/100
Number of pin contacts		5	5
Nominal current	[A]	5	5
Alternating voltage	[V AC]	250	250
Direct voltage	[V DC]	250	250
Electrical connection		M12, Female D-Coded connector	M12, Female D-Coded connector
Outlet connection		radial	radial
Electrical connection		7/8" connector, 5-pin	7/8" socket, 5-pin
Electrical connection outlet		radial	radial
Special properties		Simultaneous feeding through of PROFINET/EtherNet and 5-pin voltage supply.	Simultaneous feeding through of PROFINET/EtherNet and 5-pin voltage supply.

ⓘ For mounting on CPS 040 and CPS 041, an additional spacer (ID 1584116) is required.

Combination COS TP-K and COS TP-A

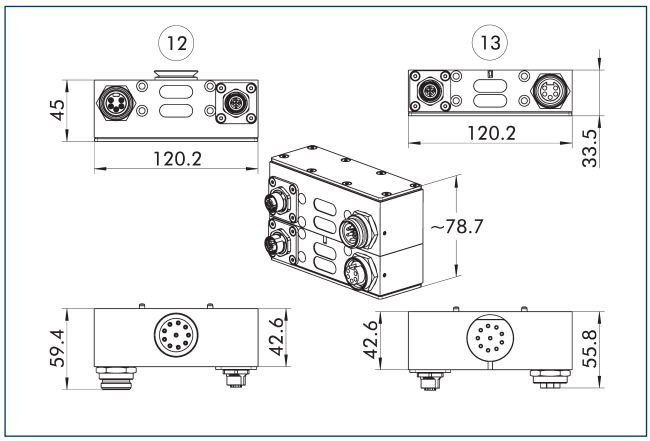

12 Master side
13 Adapter side

Pin assignment for COS TP-K with COS TP-A

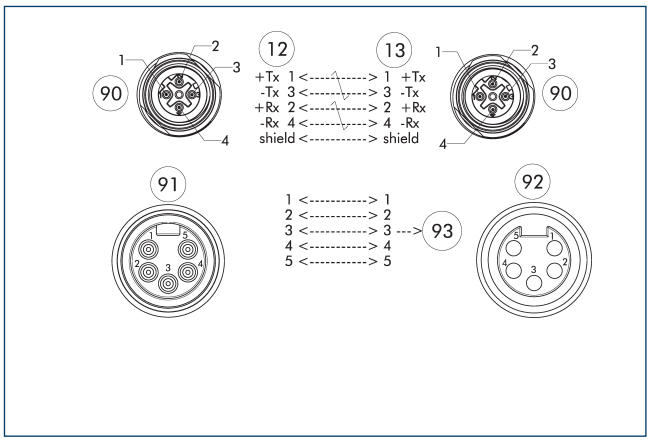

12 Master side
13 Adapter side
90 M12, Female D-Coded connector
91 7/8" connector, 5-pin
92 7/8" socket, 5-pin
93 leading pin

Cover COS JPC-A

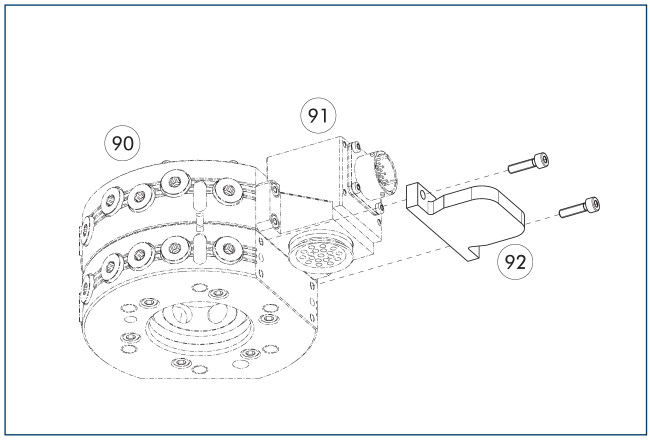

90 Automatic tool changers CPS
91 Optional module COS master
92 Cover COS JPC-A

Description	ID	Suitable for
Cover		
COS JPC-A	1584095	For many electrical modules with screw-on pattern J

Cable plug/cable extension

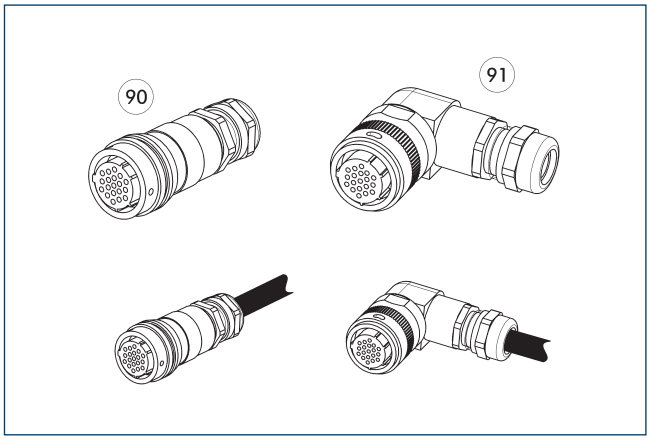

90 Plug/socket straight
91 Connector/angled socket

Other cable lengths on request.

Description	ID	
Straight cable connector		
KBU-7/8-G 5P	9957558	
KST-7/8-G 5P	9957559	
KST-M12-G 4DP	9965967	

COS PG3

Feed-through modules

Technical data

Description		COS PG3-K	COS PG3-A
ID		1586923	1586922
Suitable on		Change head	Tool
Screw connection diagram		J/B	J/B
Transmission type		Welding	Welding
Weight	[kg]	0.18	0.2
Min./max. ambient temperature	[°C]	5/60	5/60
Protection class IP		IP40 (only in coupled status)	IP40 (only in coupled status)
Number of pin contacts		1	1
Nominal current	[A]	200	200
Alternating voltage	[V AC]	600	600
Direct voltage	[V DC]	600	600
Electrical connection		M8 for ring cable lug up to 35 mm²/AWG 2	M8 for ring cable lug up to 35 mm²/AWG 2
Outlet connection		axial	axial
Special properties		Suitable for grounding in welding applications.	Suitable for grounding in welding applications.

ⓘ This feed-through module is also compatible with the CPB tool changer.

Combination COS PG3-K and COS PG3-A

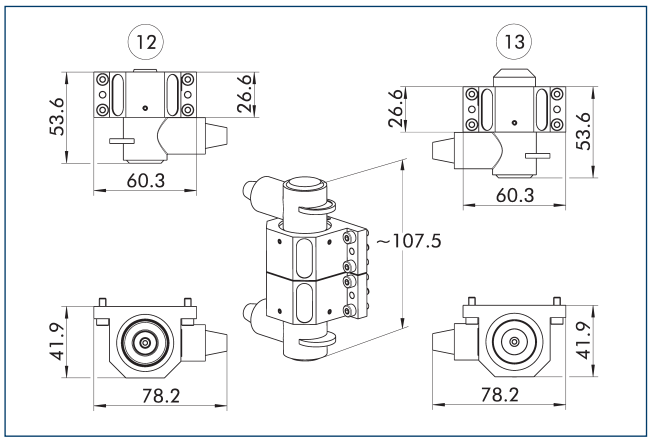

12 Master side
13 Adapter side

Combination COS PG3-K and COS PG3-A with bolt

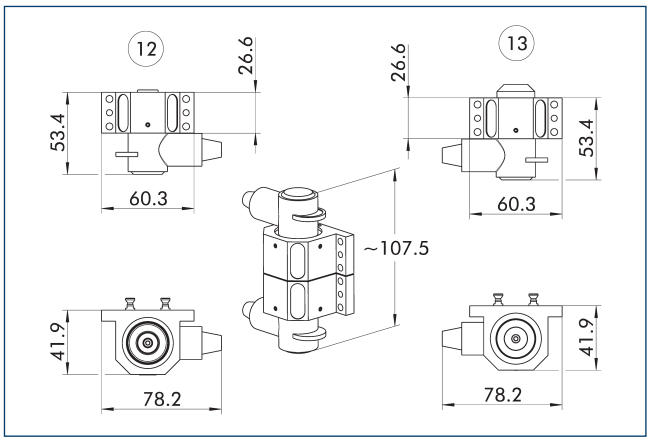

12 Master side
13 Adapter side

Pin assignment for COS PG3-K with COS PG3-A

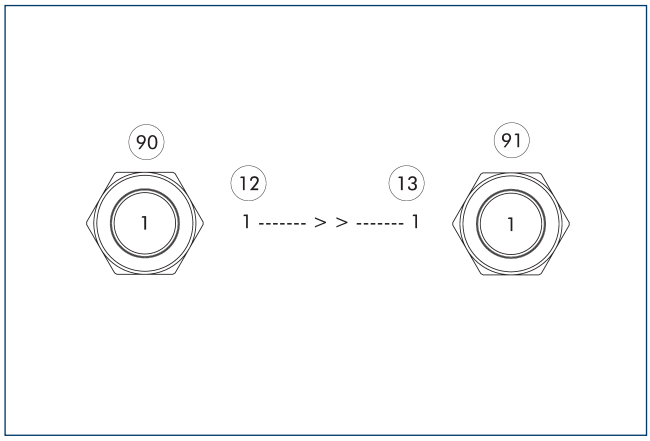

12 Master side
13 Adapter side
90 M8 for ring cable lug up to 35 mm²/AWG 2
91 M8 for ring cable lug up to 35 mm²/AWG 2

COS PY41

Feed-through modules

Technical data

Description		COS PY41-K	COS PY41-A
ID		1586926	1586925
Suitable on		Change head	Tool
Screw connection diagram		L	L
Transmission type		Welding	Welding
Weight	[kg]	0.39	0.37
Min./max. ambient temperature	[°C]	5/60	5/60
Protection class IP		IP40 (only in coupled status)	IP40 (only in coupled status)
Nominal current	[A]	165	165
Alternating voltage	[V AC]	150	150
Direct voltage	[V DC]	210	210
Number of pin contacts		3	3
Electrical connection		M25 cable gland for Ø 10 – 18 mm	M25 cable gland for Ø 10 – 18 mm
Electrical connection outlet		radial	radial
Special properties		Ring cable lugs are used to secure the cables to the contact base. M6 recommended for ring cable lugs for 35 mm²/AWG 2 and 25 mm²/AWG 4.	Ring cable lugs are used to secure the cables to the contact base. M6 recommended for ring cable lugs for 35 mm²/AWG 2 and 25 mm²/AWG 4.

Combination COS PY41-K and COS PY41-A

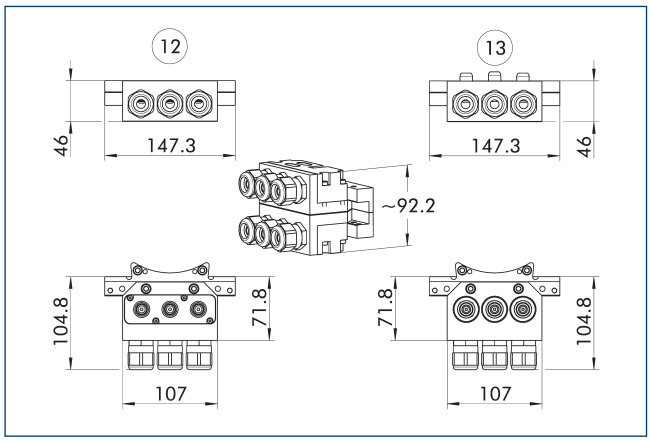

12 Master side

13 Adapter side

Pin assignment for COS PY41-K with COS PY41-A

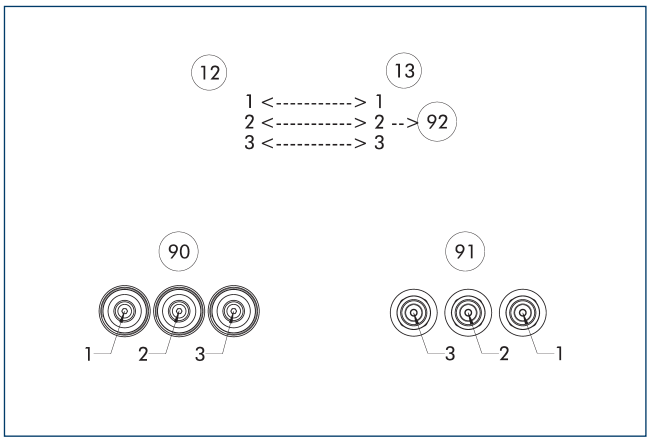

12 Master side

13 Adapter side

90 M6 recommended for ring cable lugs for 35 mm²/AWG 2 and 25 mm²/AWG 4.

91 M6 recommended for ring cable lugs for 35 mm²/AWG 2 and 25 mm²/AWG 4.

92 leading pin

COS JBx

Feed-through modules

Technical data

Description		COS JB2-K	COS JB3-K
ID		1586302	1586303
Suitable on		Change head	Change head
Screw connection diagram		L1	L2
Weight	[kg]	0.75	0.84
Min./max. ambient temperature	[°C]	5/60	5/60
Outlet connection		tangential	tangential
Type of medium		Air	Air
Max. operating pressure	[bar]	6.9	6.9
Special properties		Pneumatic connection (2 x G1/4") when using with external, customer-side valve.	Pneumatic connection (2 x G1/4") when using with external, customer-side valve.

ⓘ When using a pneumatic control module on the CPS-K on side A, the distance plate COS Z50-A-LD, ID 1584093, is also required on the CPS-A.

Combination COS JB2-K and spacer plate

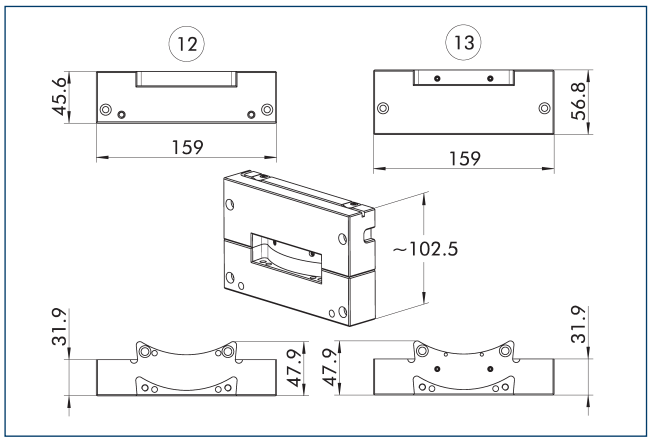

12 Master side
13 Adapter side

Combination COS JB3-K and spacer plate

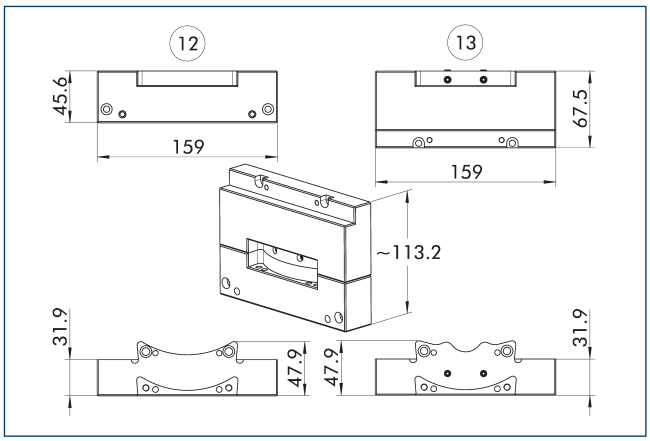

12 Master side
13 Adapter side

Distance plate

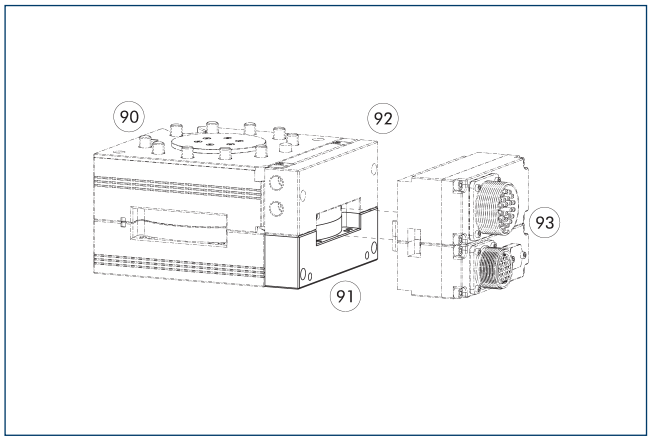

90 Automatic tool changers CPS
91 Distance plate
92 Pneumatic control module
93 Optional module COS master and adapter

Description	ID	Suitable for
Distance plate		
COS Z50-A-LD	1584093	Control modules COS JB2-K, COS JB3-K, COS JU2-K and COS JU3-K

COS AF2

Feed-through modules

Technical data

Description		COS AF2-K	COS AF2-A
ID		1586482	1586481
Suitable on		Change head	Tool
Screw connection diagram		L	L
Transmission type		Pneumatics	Pneumatics
Weight	[kg]	1.18	1.04
Min./max. ambient temperature	[°C]	5/60	5/60
Outlet connection		radial	radial
No. of fluid feed-throughs		8x G3/8"	8x G3/8"
Type of medium		Air, vacuum	Air, vacuum
Max. volumetric flow per fluid feed-through		1.400 l/min (G3/8")	1.400 l/min (G3/8")
Max. operating pressure	[bar]	6.9	6.9
Special properties		Open ports for compressed air and vacuum.	Open ports for compressed air and vacuum.

Combination COS AF2-K and COS AF2-A

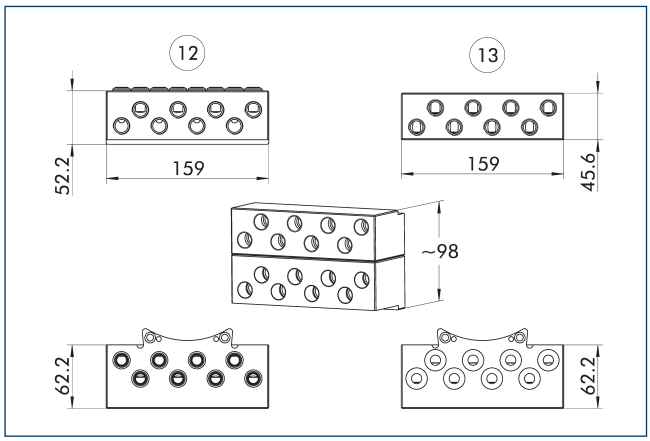

12 Master side

13 Adapter side

COS AM2

Feed-through modules

Technical data

Description		COS AM2-K	COS AM2-A
ID		1586486	1586485
Suitable on		Change head	Tool
Screw connection diagram		L	L
Transmission type		Pneumatics	Pneumatics
Weight	[kg]	0.48	0.39
Min./max. ambient temperature	[°C]	5/60	5/60
Outlet connection		radial	radial
No. of fluid feed-throughs		2x G1/2"	2x G1/2"
Type of medium		Air	Air
Max. volumetric flow per fluid feed-through		1.460 l/min (G1/2")	1.460 l/min (G1/2")
Max. operating pressure	[bar]	6.9	6.9
Special properties		self-sealing ports	self-sealing ports

Combination COS AM2-K and COS AM2-A

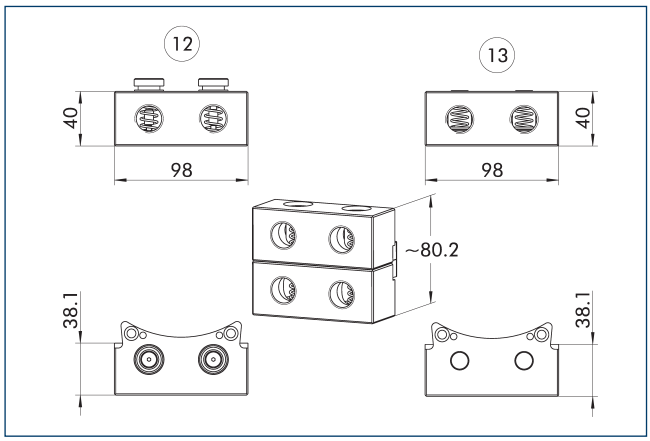

12 Master side

13 Adapter side

COS P05

Feed-through modules

Technical data

Description		COS P05-K	COS P05-A
ID		1586844	1586843
Suitable on		Change head	Tool
Screw connection diagram		J	J
Transmission type		Pneumatics	Pneumatics
Weight	[kg]	0.2	0.21
Min./max. ambient temperature	[°C]	5/60	5/60
Outlet connection		radial	radial
No. of fluid feed-throughs		10x M5	10x M5
Type of medium		Air, vacuum	Air, vacuum
Max. volumetric flow per fluid feed-through		150 l/min (M5)	150 l/min (M5)
Max. operating pressure	[bar]	8	8

Combination COS P05-K and COS P05-A

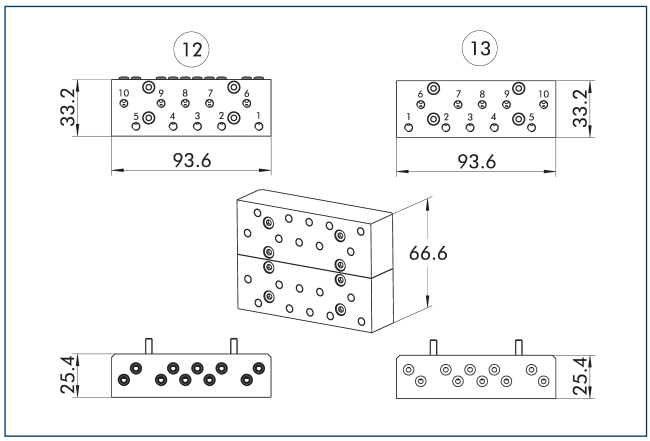

12 Master side

13 Adapter side

COS P12A

Feed-through modules

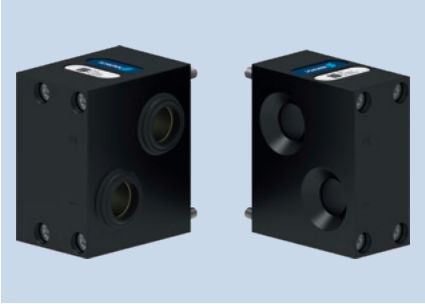

Technical data

Description		COS P12A-K	COS P12A-A
ID		1586847	1586846
Suitable on		Change head	Tool
Screw connection diagram		J	J
Transmission type		Pneumatics	Pneumatics
Weight	[kg]	0.26	0.19
Min./max. ambient temperature	[°C]	5/60	5/60
Outlet connection		axial	axial
No. of fluid feed-throughs		2x G1/2"	2x G1/2"
Type of medium		Air, vacuum	Air, vacuum
Max. volumetric flow per fluid feed-through		1.600 l/min (G1/2")	1.600 l/min (G1/2")
Max. operating pressure	[bar]	8	8

Combination COS P12A-K and COS P12A-A

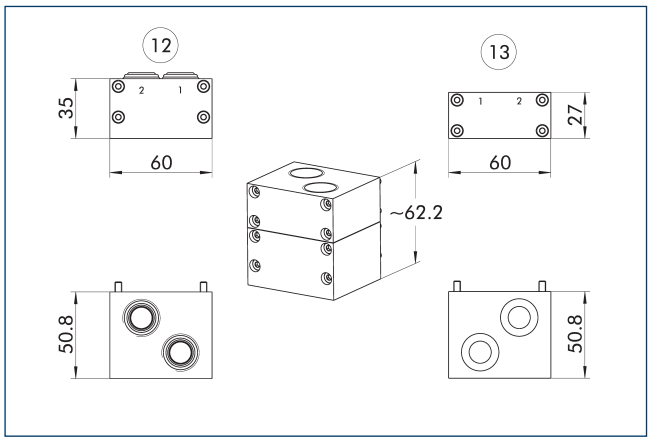

12 Master side

13 Adapter side

COS P14

Feed-through modules

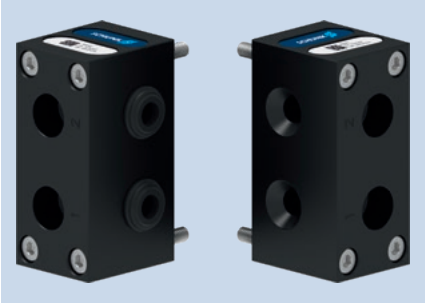

Technical data

Description		COS P14-K	COS P14-A
ID		1586849	1586848
Suitable on		Change head	Tool
Screw connection diagram		J	J
Transmission type		Pneumatics	Pneumatics
Weight	[kg]	0.14	0.13
Min./max. ambient temperature	[°C]	5/60	5/60
Outlet connection		radial	radial
No. of fluid feed-throughs		2x G1/4"	2x G1/4"
Type of medium		Air, vacuum	Air, vacuum
Max. volumetric flow per fluid feed-through		900 l/min (G1/4")	900 l/min (G1/4")
Max. operating pressure	[bar]	8	8

Combination COS P14-K and COS P14-A

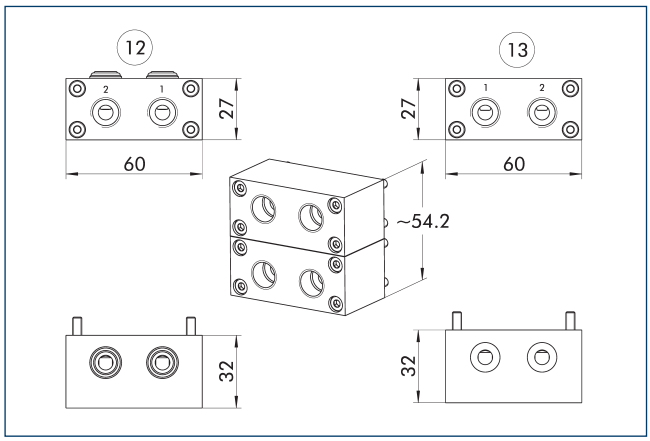

12 Master side

13 Adapter side

COS P186

Feed-through modules

Technical data

Description		COS P186-K	COS P186A-K	COS P186-A	COS P186A-A
ID		1586862	1586866	1586861	1586864
Suitable on		Change head	Change head	Tool	Tool
Screw connection diagram		J/B	J/B	J/B	J/B
Transmission type		Pneumatics	Pneumatics	Pneumatics	Pneumatics
Weight	[kg]	0.14	0.16	0.16	0.16
Min./max. ambient temperature	[°C]	5/60	5/60	5/60	5/60
Outlet connection		radial	axial	radial	axial
No. of fluid feed-throughs		6x G1/8"	6x G1/8"	6x G1/8"	6x G1/8"
Type of medium		Air, vacuum	Air, vacuum	Air, vacuum	Air, vacuum
Max. volumetric flow per fluid feed-through		650 l/min (G1/8")	650 l/min (G1/8")	650 l/min (G1/8")	650 l/min (G1/8")
Max. operating pressure	[bar]	8	8	8	8
Special properties		COS P186-K and COS P186A-K are compatible with COS P186-A and COS P186A-A, respectively.	COS P186-K and COS P186A-K are compatible with COS P186-A and COS P186A-A, respectively.	COS P186-A and COS P186A-A are compatible with COS P186-K and COS P186A-K, respectively.	COS P186-A and COS P186A-A are compatible with COS P186-K and COS P186A-K, respectively.

ⓘ This feed-through module is also compatible with the CPB tool changer.

Combination COS P186-K and COS P186-A

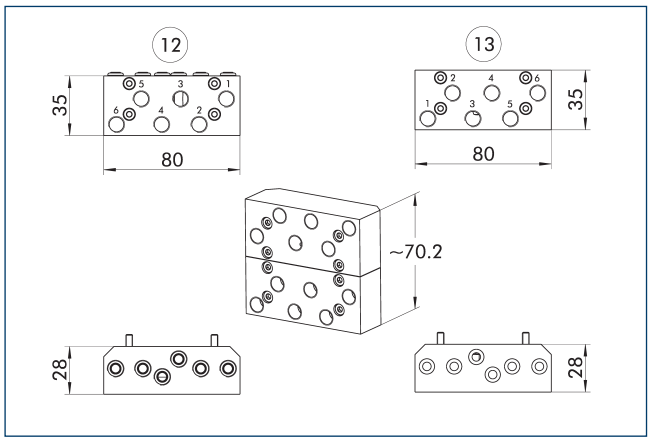

12 Master side
13 Adapter side

Combination COS P186-K and COS P186-A with bolt

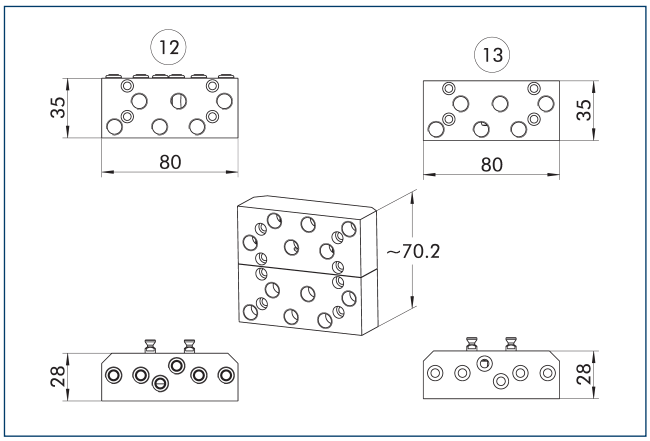

12 Master side
13 Adapter side

Combination COS P186A-K and COS P186A-A

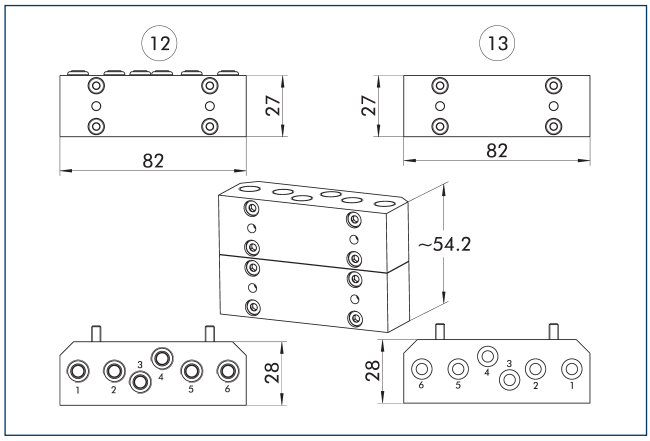

12 Master side
13 Adapter side

Combination COS P186A-K and COS P186A-A with bolt

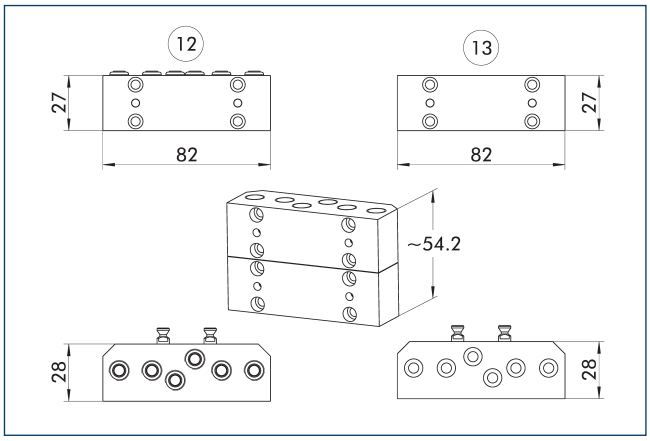

12 Master side
13 Adapter side

Combination options P186 and P186A

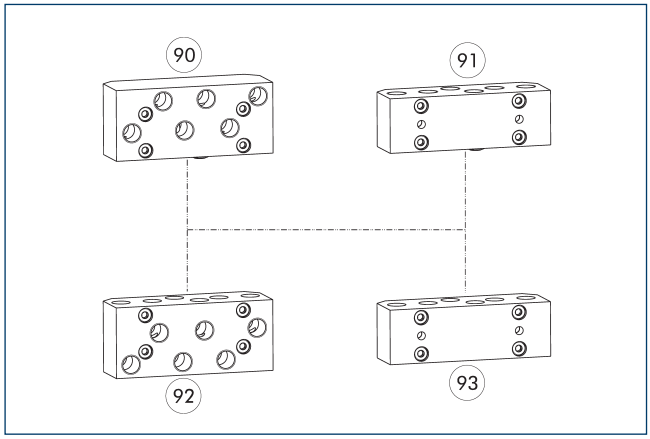

90 COS P186-K
91 COS P186A-K
92 COS P186-A
93 COS P186A-A

COS P188

Feed-through modules

Technical data

Description		COS P188-K	COS P188-A
ID		1586870	1586869
Suitable on		Change head	Tool
Screw connection diagram		J	J
Transmission type		Pneumatics	Pneumatics
Weight	[kg]	0.24	0.24
Min./max. ambient temperature	[°C]	5/60	5/60
Outlet connection		radial	radial
No. of fluid feed-throughs		8x G1/8"	8x G1/8"
Type of medium		Air, vacuum	Air, vacuum
Max. volumetric flow per fluid feed-through		650 l/min (G1/8")	650 l/min (G1/8")
Max. operating pressure	[bar]	8	8

Combination COS P188-K and COS P188-A

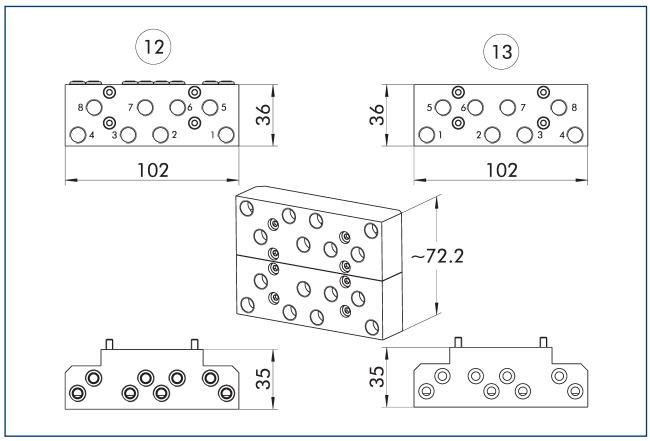

12 Master side

13 Adapter side

COS P18

Feed-through modules

Technical data

Description		COS P18-K	COS P18-A
ID		1586872	1586871
Suitable on		Change head	Tool
Screw connection diagram		J	J
Transmission type		Pneumatics	Pneumatics
Weight	[kg]	0.15	0.15
Min./max. ambient temperature	[°C]	5/60	5/60
Outlet connection		radial	radial
No. of fluid feed-throughs		4x G1/8"	4x G1/8"
Type of medium		Air, vacuum	Air, vacuum
Max. volumetric flow per fluid feed-through		650 l/min (G1/8")	650 l/min (G1/8")
Max. operating pressure	[bar]	8	8

Combination COS P18-K and COS P18-A

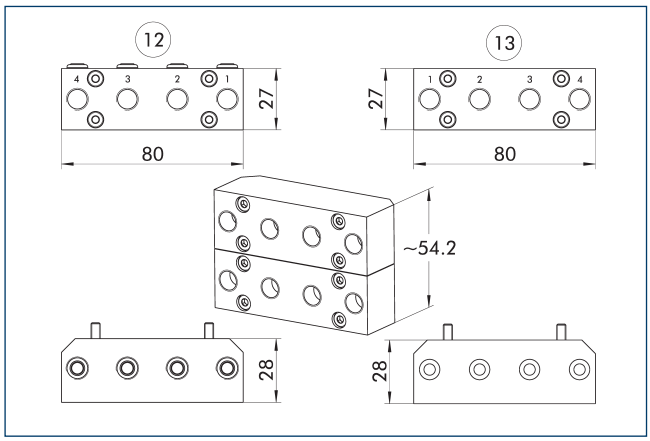

12 Master side

13 Adapter side

COS P238

Feed-through modules

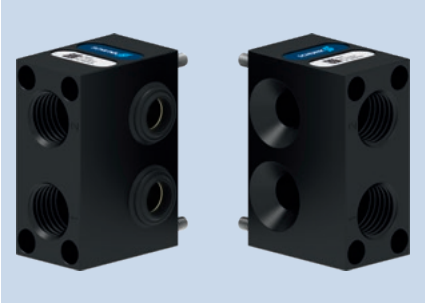

Technical data

Description		COS P238-K	COS P238-A
ID		1586877	1586876
Suitable on		Change head	Tool
Screw connection diagram		J	J
Transmission type		Pneumatics	Pneumatics
Weight	[kg]	0.15	0.14
Min./max. ambient temperature	[°C]	5/60	5/60
Outlet connection		radial	radial
No. of fluid feed-throughs		2x G3/8"	2x G3/8"
Type of medium		Air, vacuum	Air, vacuum
Max. volumetric flow per fluid feed-through		1.400 l/min (G3/8")	1.400 l/min (G3/8")
Max. operating pressure	[bar]	8	8

Combination COS P238-K and COS P238-A

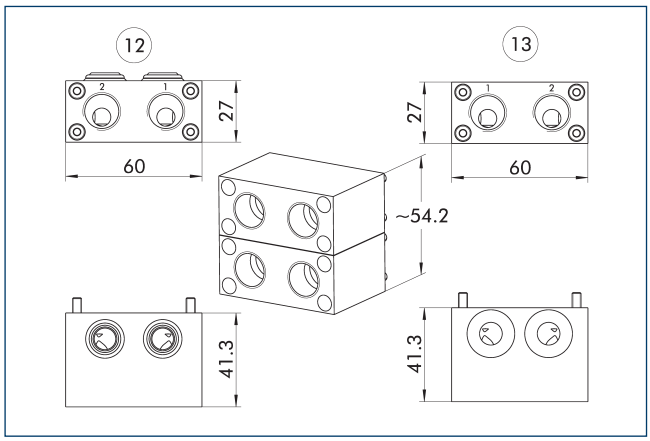

12 Master side

13 Adapter side

COS P38A

Feed-through modules

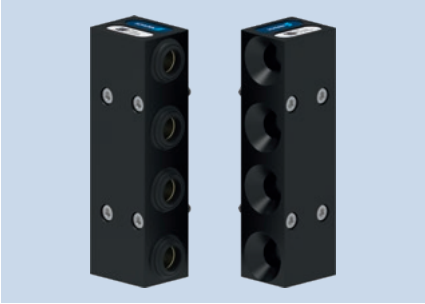

Technical data

Description		COS P38A-K	COS P38A-A
ID		1586879	1586878
Suitable on		Change head	Tool
Screw connection diagram		J	J
Transmission type		Pneumatics	Pneumatics
Weight	[kg]	0.21	0.21
Min./max. ambient temperature	[°C]	5/60	5/60
Outlet connection		axial	axial
No. of fluid feed-throughs		4x G3/8"	4x G3/8"
Type of medium		Air, vacuum	Air, vacuum
Max. volumetric flow per fluid feed-through		1.400 l/min (G3/8")	1.400 l/min (G3/8")
Max. operating pressure	[bar]	8	8

ⓘ For mounting on CPS 040 and CPS 041, an additional spacer (ID 1584116) is required.

Combination COS P38A-K and COS P38A-A

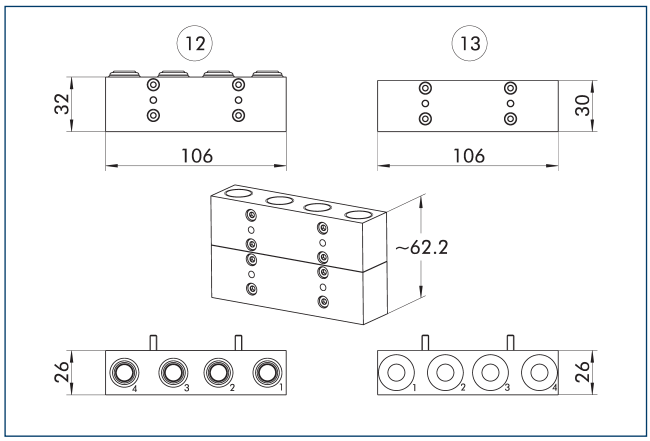

12 Master side

13 Adapter side

COS P48

Feed-through modules

Technical data

Description		COS P48-K	COS P48-A
ID		1586891	1586890
Suitable on		Change head	Tool
Screw connection diagram		J	J
Transmission type		Pneumatics	Pneumatics
Weight	[kg]	0.24	0.21
Min./max. ambient temperature	[°C]	5/60	5/60
Outlet connection		radial	radial
No. of fluid feed-throughs		4x G3/8"	4x G3/8"
Type of medium		Air, vacuum	Air, vacuum
Max. volumetric flow per fluid feed-through		1.400 l/min (G3/8")	1.400 l/min (G3/8")
Max. operating pressure	[bar]	8	8

ⓘ For mounting on CPS 040 and CPS 041, an additional spacer (ID 1584116) is required.

Combination COS P48-K and COS P48-A

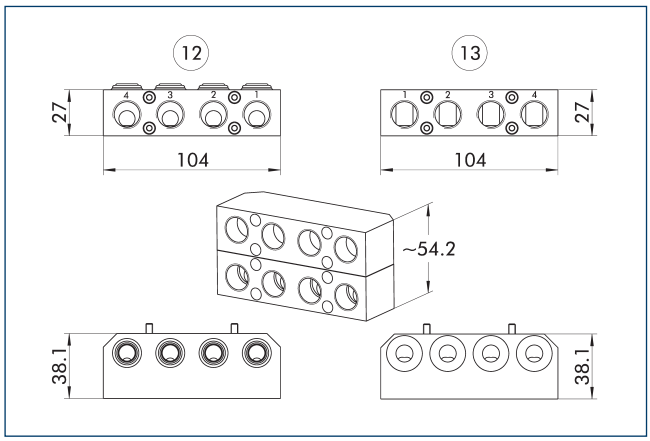

12 Master side

13 Adapter side

COS P8M5

Feed-through modules

Technical data

Description		COS P8M5-K	COS P8M5-A
ID		1586921	1586919
Suitable on		Change head	Tool
Screw connection diagram		J	J
Transmission type		Pneumatics	Pneumatics
Weight	[kg]	0.16	0.17
Min./max. ambient temperature	[°C]	5/60	5/60
Outlet connection		axial or radial	axial or radial
No. of fluid feed-throughs		8x M5	8x M5
Type of medium		Air, vacuum	Air, vacuum
Max. volumetric flow per fluid feed-through		150 l/min (M5)	150 l/min (M5)
Max. operating pressure	[bar]	8	8
Special properties		If required, another optional module can be radially mounted in a second row with the mounting surface J. The volumetric flow kV depends on the type of connection. Axial connection kV: 0.0622, radial connection kV: 0.0588, combination axial and radial connection kV: 0.0595.	If required, another optional module can be radially mounted in a second row with the mounting surface J. The volumetric flow kV depends on the type of connection. Axial connection kV: 0.0622, radial connection kV: 0.0588, combination axial and radial connection kV: 0.0595.

Combination COS P8M5-K and COS P8M5-A

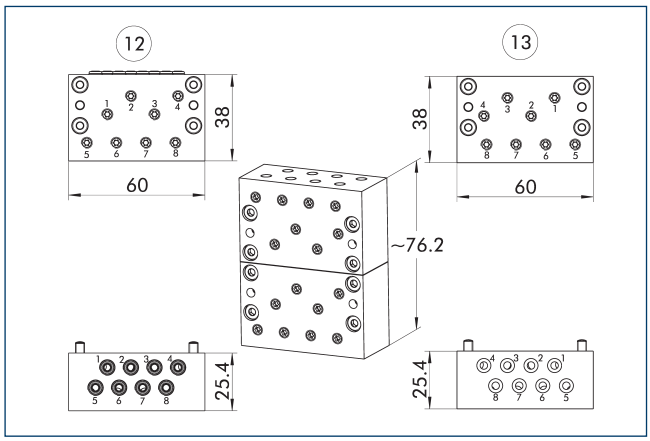

12 Master side

13 Adapter side

COS JUx

Feed-through modules

Technical data

Description		COS JU2-K	COS JU3-K
ID		1586306	1586308
Suitable on		Change head	Change head
Screw connection diagram		L1	L2
Weight	[kg]	0.58	0.6
Min./max. ambient temperature	[°C]	5/50	5/50
Protection class IP		IP20	IP20
Alternating voltage	[V AC]	24	24
Direct voltage	[V DC]	24	24
Outlet connection		tangential	tangential
Type of medium		Air	Air
Max. operating pressure	[bar]	6.9	6.9
Special properties		Valve module with bi-stable directional control valve for controlling the CPS-K. Integrated pin block for control via appropriate control module. Pneumatic connection 1x G1/4".	Valve module with bi-stable directional control valve for controlling the CPS-K. Integrated pin block for control via appropriate control module. Pneumatic connection 1x G1/4".

ⓘ When using a pneumatic control module (with integrated valve) on the CPS-K on side A, the distance plate COS Z50-A-LD, ID 1584093, is also required on the CPS-A.

Combination COS JU2-K and spacer plate

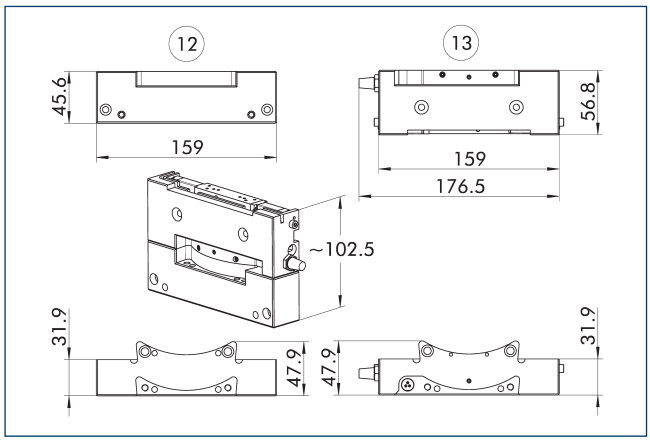

12 Master side
13 Adapter side

Combination COS JU3-K and spacer plate

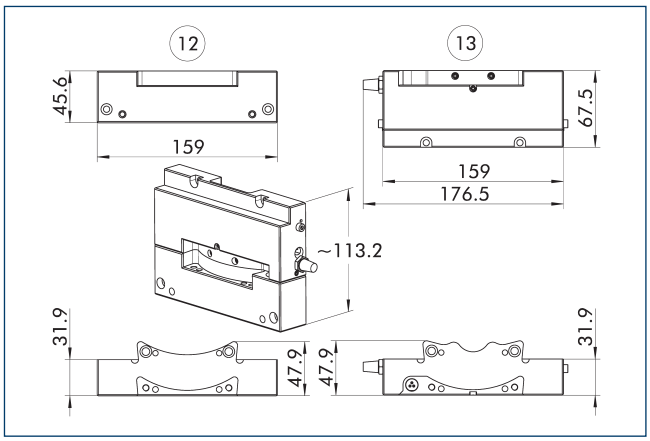

12 Master side
13 Adapter side

Distance plate

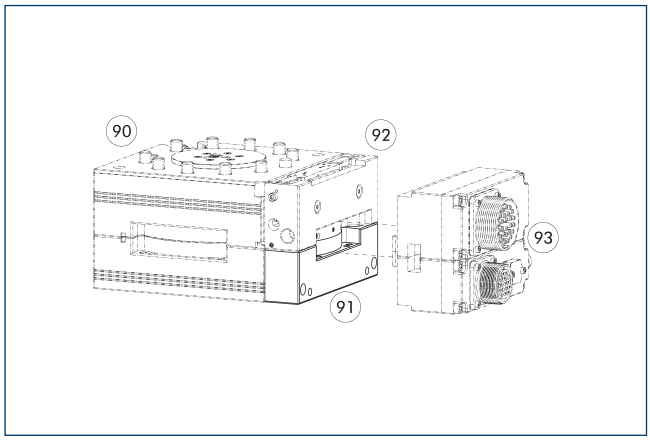

90 Automatic tool changer CPS
91 Distance plate
92 Optional module COS master
93 Optional module COS master and adapter

Description	ID	Suitable for
Distance plate		
COS Z50-A-LD	1584093	Control modules COS JB2-K, COS JB3-K, COS JU2-K and COS JU3-K

COS V112A

Feed-through modules

Technical data

Description		COS V112A-K	COS V112A-A
ID		1586745	1586744
Suitable on		Change head	Tool
Screw connection diagram		J	J
Transmission type		Vacuum	Vacuum
Weight	[kg]	0.39	0.36
Min./max. ambient temperature	[°C]	5/60	5/60
Outlet connection		axial	axial
No. of fluid feed-throughs		1x G3/2"	1x G3/2"
Type of medium		Vacuum	Vacuum
Max. volumetric flow per fluid feed-through		G3/2"	G3/2"
Special properties		An adapter plate is required for mounting the optional module on the mounting surface J. This is included in the scope of delivery.	An adapter plate is required for mounting the optional module on the mounting surface J. This is included in the scope of delivery.

Combination COS V112A-K and COS V112A-A

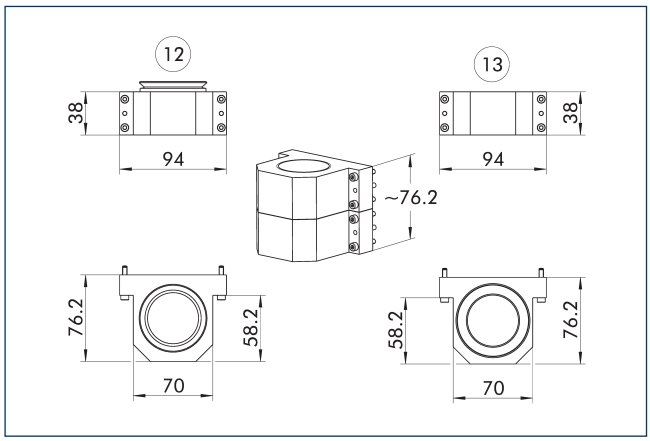

12 Master side

13 Adapter side

COS V200A

Feed-through modules

Technical data

Description		COS V200A-K	COS V200A-A
ID		1586747	1586746
Suitable on		Change head	Tool
Screw connection diagram		J	J
Transmission type		Vacuum	Vacuum
Weight	[kg]	0.68	0.63
Min./max. ambient temperature	[°C]	5/60	5/60
Outlet connection		axial	axial
No. of fluid feed-throughs		1x G2"	1x G2"
Type of medium		Vacuum	Vacuum
Max. volumetric flow per fluid feed-through		G2"	G2"
Special properties		An adapter plate is required for mounting the optional module on the mounting surface J. This is included in the scope of delivery.	An adapter plate is required for mounting the optional module on the mounting surface J. This is included in the scope of delivery.

Combination COS V200A-K and COS V200A-A

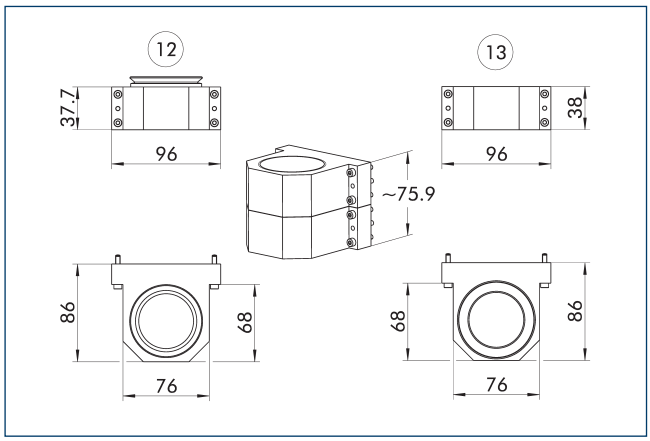

12 Master side

13 Adapter side

COS V34

Feed-through modules

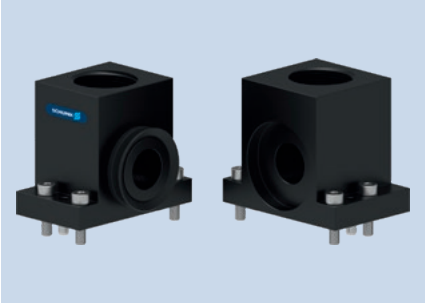

Technical data

Description		COS V34-K	COS V34-A
ID		1586750	1586748
Suitable on		Change head	Tool
Screw connection diagram		J	J
Transmission type		Vacuum	Vacuum
Weight	[kg]	0.21	0.2
Min./max. ambient temperature	[°C]	5/60	5/60
Outlet connection		radial	radial
No. of fluid feed-throughs		1x G3/4"	1x G3/4"
Type of medium		Vacuum	Vacuum
Max. volumetric flow per fluid feed-through		114,2 l/min (G3/4")	114,2 l/min (G3/4")

Combination COS V34-K and COS V34-A

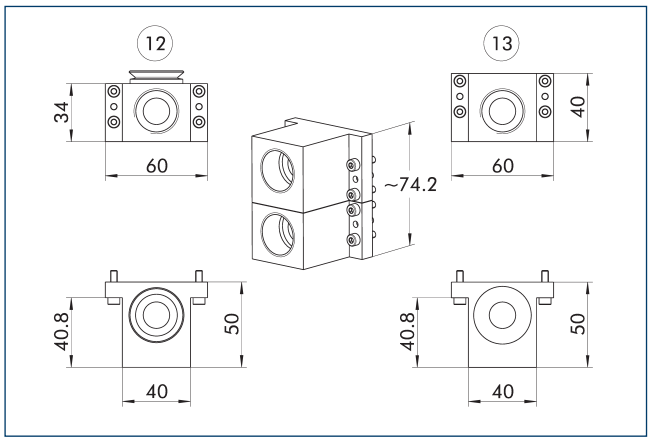

12 Master side

13 Adapter side

COS AH2

Feed-through modules

Technical data

Description		COS AH2-K	COS AH4-A
ID		1586483	1586484
Suitable on		Change head	Tool
Screw connection diagram		L	L
Transmission type		Pneumatics	Pneumatics
Weight	[kg]	2.21	1.16
Min./max. ambient temperature	[°C]	5/60	5/60
Outlet connection		radial	radial
No. of fluid feed-throughs		8x G3/8"	8x G3/8"
Type of medium		Air	Air
Max. volumetric flow per fluid feed-through		1.460 l/min (G3/8")	1.460 l/min (G3/8")
Max. operating pressure	[bar]	6.9	6.9
Special properties		self-sealing ports	self-sealing ports

Combination of COS AH2-K and COS AH4-A

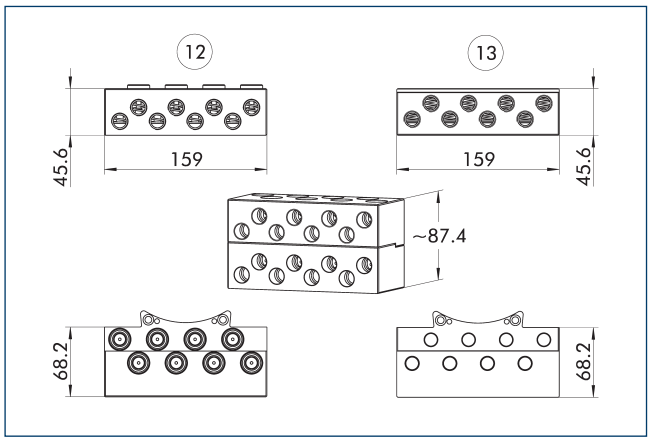

12 Master side

13 Adapter side

COS FC2

Feed-through modules

Technical data

Description		COS FC2-K	COS FC4-A
ID		1586503	1586504
Suitable on		Change head	Tool
Screw connection diagram		L	L
Transmission type		liquids	liquids
Weight	[kg]	5.9	5.9
Min./max. ambient temperature	[°C]	5/60	5/60
Outlet connection		radial	radial
No. of fluid feed-throughs		8x G3/8"	8x G3/8"
Type of medium		Air, water	Air, water
Max. volumetric flow per fluid feed-through		1.300 l/min (G3/8")	1.300 l/min (G3/8")
Max. operating pressure	[bar]	6.9	6.9
Special properties		self-sealing ports, stainless steel housing	self-sealing ports, stainless steel housing

Combination COS FC2-K and COS FC4-A

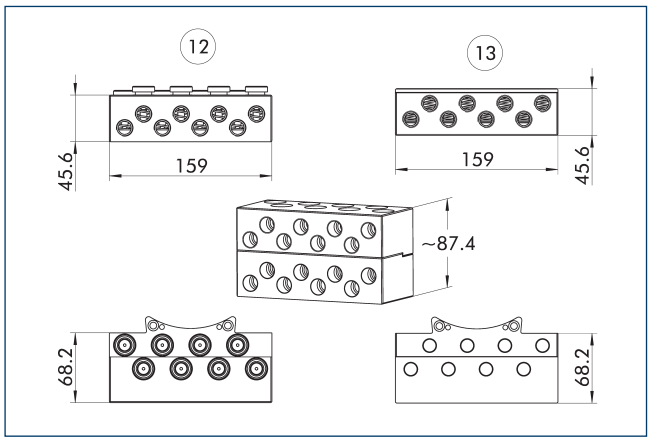

12 Master side

13 Adapter side

COS FG2

Feed-through modules

Technical data

Description		COS FG2-K	COS FG2-A
ID		1586506	1586505
Suitable on		Change head	Tool
Screw connection diagram		J	J
Transmission type		liquids	liquids
Weight	[kg]	0.41	0.33
Min./max. ambient temperature	[°C]	5/60	5/60
Outlet connection		radial	radial
No. of fluid feed-throughs		2x G3/8"	2x G3/8"
Type of medium		Air, water	Air, water
Max. volumetric flow per fluid feed-through		1.300 l/min (G3/8")	1.300 l/min (G3/8")
Max. operating pressure	[bar]	6.9	6.9
Special properties		self-sealing ports, stainless steel housing	self-sealing ports, stainless steel housing

Combination COS FG2-K and COS FG2-A

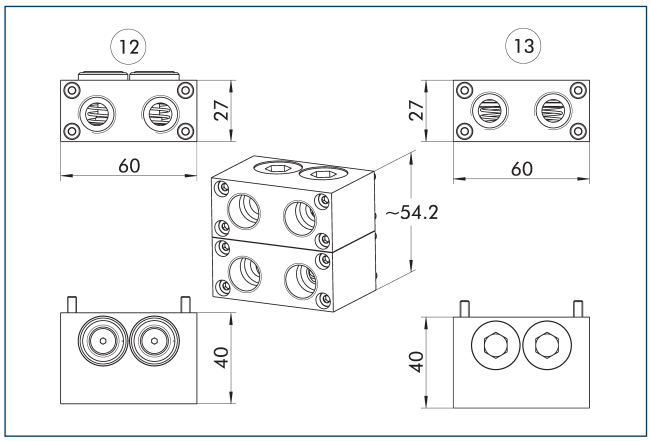

12 Master side

13 Adapter side

COS FG4

Feed-through modules

Technical data

Description		COS FG4-K	COS FG4-A
ID		1586508	1586507
Suitable on		Change head	Tool
Screw connection diagram		J	J
Transmission type		liquids	liquids
Weight	[kg]	0.72	0.58
Min./max. ambient temperature	[°C]	5/60	5/60
Outlet connection		radial	radial
No. of fluid feed-throughs		4x G3/8"	4x G3/8"
Type of medium		Air, water	Air, water
Max. volumetric flow per fluid feed-through		1.300 l/min (G3/8")	1.300 l/min (G3/8")
Max. operating pressure	[bar]	6.9	6.9
Special properties		self-sealing ports, stainless steel housing	self-sealing ports, stainless steel housing

ⓘ Not recommended for sizes CPS 040 and CPS 041. Please ask for details.

Combination COS FG4-K and COS FG4-A

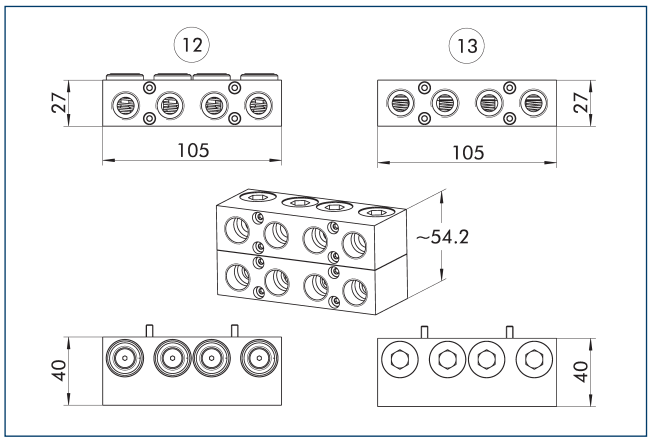

12 Master side

13 Adapter side

COS FH12

Feed-through modules

Technical data

Description		COS FH12-K	COS FH12-A
ID		1586540	1586509
Suitable on		Change head	Tool
Screw connection diagram		L	L
Transmission type		liquids	liquids
Weight	[kg]	2.9	2.27
Min./max. ambient temperature	[°C]	5/60	5/60
Outlet connection		radial	radial
No. of fluid feed-throughs		4x G1/2"	4x G1/2"
Type of medium		Air, water	Air, water
Max. volumetric flow per fluid feed-through		1.460 l/min (G1/2")	1.460 l/min (G1/2")
Max. operating pressure	[bar]	6.9	6.9
Special properties		self-sealing ports, stainless steel housing	self-sealing ports, stainless steel housing

Combination COS FH12-K and COS FH12-A

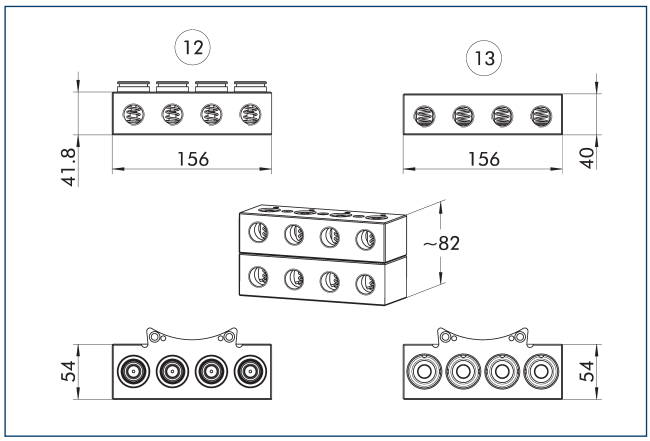

12 Master side

13 Adapter side

COS F2HG14A

Feed-through modules

Technical data

Description		COS F2HG14A-K	COS F2HG14A-A
ID		1586502	1586501
Suitable on		Change head	Tool
Screw connection diagram		J	J
Transmission type		Hydraulics	Hydraulics
Weight	[kg]	0.71	0.61
Min./max. ambient temperature	[°C]	5/60	5/60
Outlet connection		axial	axial
No. of fluid feed-throughs		2x G1/4"	2x G1/4"
Type of medium		Hydraulic, water	Hydraulic, water
Max. volumetric flow per fluid feed-through		6,5 l/min (G1/4")	6,5 l/min (G1/4")
Max. operating pressure	[bar]	160	160
Special properties		The pressure may only be applied to one port at any time. The high pressure creates separation forces, which greatly reduces the additionally attached mass on the tool changer. The ports are self-sealing. Nevertheless, a small amount of liquid residue may remain on the surface of the ports when they are uncoupled. The amount of liquid depends to a large extent on the type of fluid processed.	The pressure may only be applied to one port at any time. The high pressure creates separation forces, which greatly reduces the additionally attached mass on the tool changer. The ports are self-sealing. Nevertheless, a small amount of liquid residue may remain on the surface of the ports when they are uncoupled. The amount of liquid depends to a large extent on the type of fluid processed.

ⓘ Not suitable for sizes CPS 040 and CPS 041.

Combination COS F2HG14A-K and COS F2HG14A-A

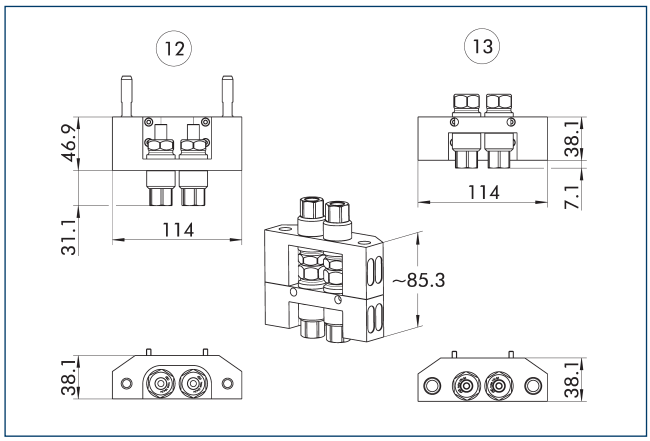

12 Master side

13 Adapter side

COS HB2

Feed-through modules

Technical data

Description		COS HB2-K	COS HB2-A
ID		1586284	1586283
Suitable on		Change head	Tool
Screw connection diagram		L	L
Transmission type		Hydraulics	Hydraulics
Weight	[kg]	1.47	1.3
Min./max. ambient temperature	[°C]	5/60	5/60
Outlet connection		axial	axial
No. of fluid feed-throughs		1x G1/4"	1x G1/4"
No. of fluid feed-throughs		2x G3/8"	2x G3/8"
Type of medium		Hydraulic, water	Hydraulic, water
Max. volumetric flow per fluid feed-through		1.300 l/min (G1/4")	1.300 l/min (G1/4")
Max. volumetric flow per fluid feed-through		20,5 l/min (G3/8")	20,5 l/min (G3/8")
Max. operating pressure	[bar]	158	158
Special properties		Hydraulic module for the transmission of hydraulic fluid up to 158 bar operating pressure.	Hydraulic module for the transmission of hydraulic fluid up to 158 bar operating pressure.

Combination COS HB2-K and COS HB2-A

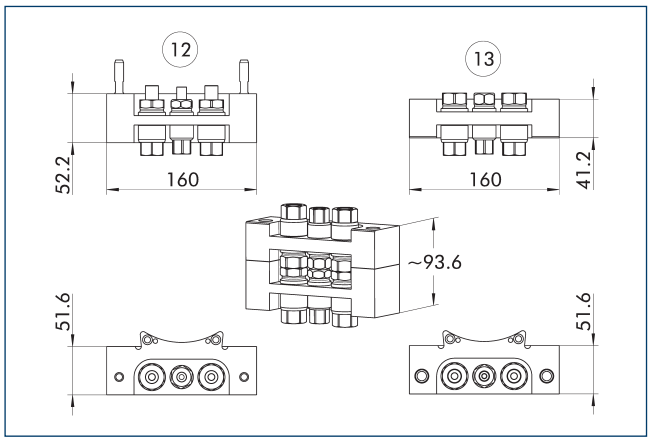

12 Master side
13 Adapter side

Cover COS HC2-A

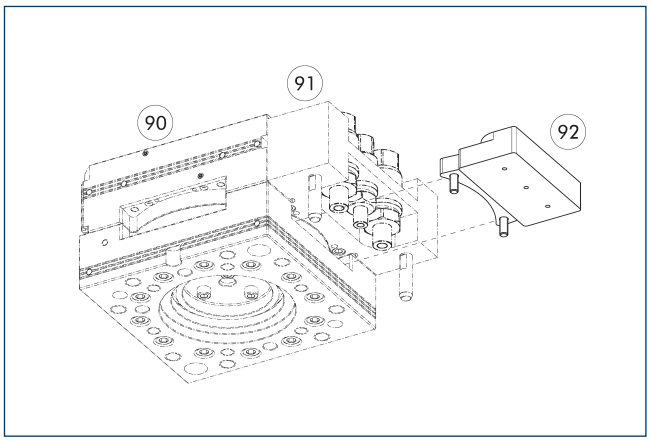

90 Automatic tool changers CPS
91 Optional module COS master
92 Cover COS HC2-A

Description	ID	Suitable for
Cover		
COS HC2-A	1586300	Hydraulic modules COS HB2-K and COS HB6-K

COS HB6

Feed-through modules

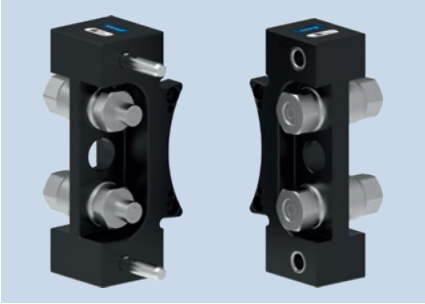

Technical data

Description		COS HB6-K	COS HB6-A
ID		1586289	1586287
Suitable on		Change head	Tool
Screw connection diagram		L	L
Transmission type		Hydraulics	Hydraulics
Weight	[kg]	1.47	1.3
Min./max. ambient temperature	[°C]	5/60	5/60
Outlet connection		axial	axial
No. of fluid feed-throughs		2x G3/8"	2x G3/8"
Type of medium		Hydraulic, water	Hydraulic, water
Max. volumetric flow per fluid feed-through		1.460 l/min (G3/8")	1.460 l/min (G3/8")
Max. operating pressure	[bar]	496	496
Special properties		Hydraulic module for the transmission of hydraulic fluid up to 496 bar operating pressure	Hydraulic module for the transmission of hydraulic fluid up to 496 bar operating pressure

Combination COS HB6-K and COS HB6-A

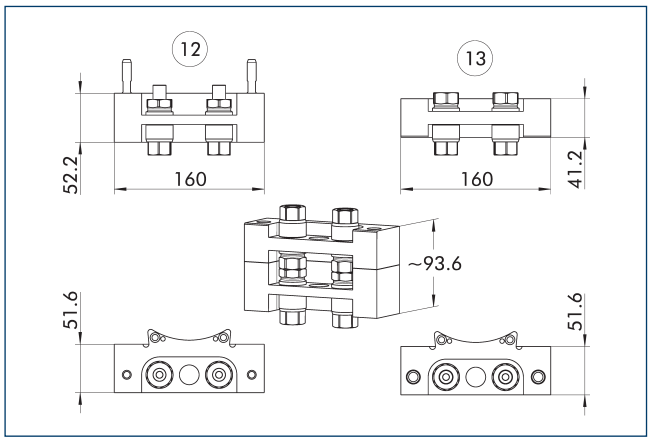

12 Master side
13 Adapter side

Cover COS HC2-A

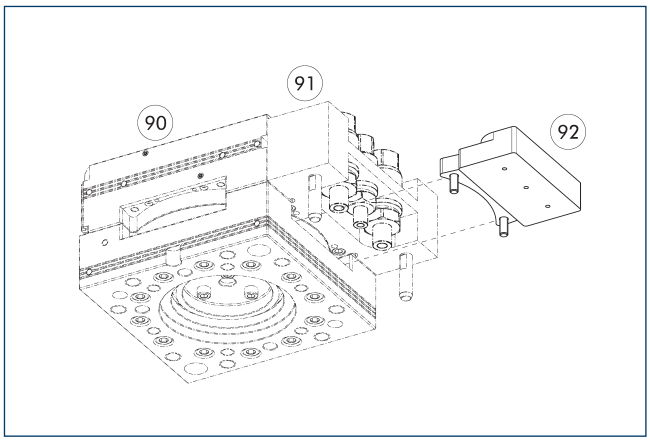

90 Automatic tool changers CPS
91 Optional module COS master
92 Cover COS HC2-A

Description	ID	Suitable for
Cover		
COS HC2-A	1586300	Hydraulic modules COS HB2-K and COS HB6-K

SCHUNK SE & Co. KG
Spanntechnik
Greiftechnik
Automatisierungstechnik

Bahnhofstr. 106 - 134
D-74348 Lauffen/Neckar
Tel. +49-7133-103-0
Fax +49-7133-103-2399
info@de.schunk.com
schunk.com

Folgen Sie uns | *Follow us*

2026-01-19 © 2026 SCHUNK SE & Co. KG