

Assembly and operating manual
EGU
Universal gripper, electric

Hand in hand for tomorrow

Legal notice

Copyright:
This manual is protected by copyright. The author is SCHUNK SE & Co. KG.
All rights reserved.

Technical changes:
We reserve the right to make technical improvements.

Document number: 1513986

Version: 17.00 | 9/24/2026 | en-US

Dear
Customer,
Thank you for putting your trust in our products and our family-owned company, the leading technology supplier of robots and production machines.
Our team is always available to answer any questions on this product and other solutions. We look forward to your challenging questions. We will find a solution!
Best regards,
The SCHUNK Team

Customer Management
Tel. +49-7133-103-2503
Fax +49-7133-103-2189
cmg@de.schunk.com

Please read the operating manual in full and keep it close to the product.

Table of Contents

1 General 6

1.1 About this manual 6

1.1.1 Illustration of safety notes 6

1.1.2 Definition of Terms 7

1.1.3 Symbol definition 7

1.1.4 Brands 7

1.1.5 Applicable documents 8

1.1.6 Sizes 8

1.1.7 Variants 8

1.2 Warranty 9

1.3 Scope of delivery 9

1.4 Accessories 9

2 Basic safety notes 10

2.1 Appropriate use 10

2.2 Notes for the operator/integrator 11

2.3 Structural changes 11

2.4 Spare parts 11

2.5 Ambient conditions and operating conditions 12

2.5.1 Ambient conditions 12

2.5.2 Insulation resistance and voltage resistance in accordance with EN 60204-1 13

2.6 Personnel qualification 13

2.7 Personal protective equipment 14

2.8 Notes on safe operation 15

2.9 Transport 15

2.10 Malfunctions 15

2.11 Fundamental dangers 16

2.11.1 Protection during handling and assembly 16

2.11.2 Protection during commissioning and operation 16

2.11.3 Protection against corruption 17

3 Technical data 18

3.1 Name plate / engraving 18

3.2 Mechanical operating data 19

3.3 Electrical operating data 21

3.3.1 Starting current behavior 22

3.4 Positioning and repeat accuracy 23

3.5 Communication interfaces 24

3.6 Ambient conditions and operating conditions 24

3.7 Gripping modes 25
3.8 Diagrams 26
3.9 Auxiliary materials and lubricants 33

4 Design and description 34
4.1 Design 34
4.2 Description 34
4.3 Displays and control elements 35
4.3.1 LED status display PROFINET 35
4.3.2 LED status display EtherNet/IP™ 36
4.3.3 LED status display EtherCAT® 38
4.3.4 LED status display IO-Link 40
4.3.5 LED status display Modbus RTU 41

5 Assembly and settings 42
5.1 Safety 42
5.2 Installing and connecting 42
5.2.1 Securing the product to the robot 43
5.3 Mechanical connection 45
5.4 Electrical connection 50
5.4.1 PIN allocation 51
5.4.2 Cable connections 53
5.4.3 Connection diagram 54
5.4.4 Switching off the power supply by external safety switchgear 56
5.4.5 External protection 58
5.4.6 Connecting the ground cable (functional ground) 58

6 Commissioning 59

7 Operation 60
7.1 Safety 60
7.2 Operating behavior of the product 61

8 Troubleshooting 62
8.1 Safety 62
8.2 Communication malfunction 63
8.3 Product moves in a jerky fashion, is sluggish or blocked 63

9 Maintenance 65
9.1 Safety 65
9.2 Maintenance intervals 65

10 Disassembly and Disposal 67

11 Compatibility with robots 68
11.1 ABB 68

11.2 Universal Robots 69
11.3 FANUC 70
11.4 YASKAWA 71

1 General

1.1 About this manual

This manual contains important information for the safe, correct use of the product.

The manual is an integral part of the product and must be kept accessible for personnel at all times.

Personnel must have read and understood this manual before beginning any work. The observance of all safety notes in this manual is a prerequisite to ensure safe work processes.

Besides this manual, other documents which apply are those listed under ▸ 1.1.5 [🗋 8].

NOTE: The illustrations in this manual are intended to provide a basic understanding and may deviate from the actual version.

1.1.1 Illustration of safety notes

To make risks clear, the following signal words and symbols are used for safety notes.



⚠ DANGER

Danger to individuals!

Ignoring a safety note such as this will certainly lead to irreversible injury and even death.



⚠ WARNING

Danger to individuals!

Ignoring a safety note such as this can lead to irreversible injury and even death.



⚠ CAUTION

Danger to individuals!

Non-observance can cause minor injuries.

NOTICE

Material damage!

Information about avoiding material damage.

1.1.2 Definition of Terms

The term "product" or "module" replaces the product name on the title page in this manual.

1.1.3 Symbol definition

The following symbols are used in this manual:

■ Prerequisite for an action

1. Action 1
2. Action 2
   ⇨ Intermediate results

⇨ Final results

▸ 1.1.3 [🗋 7]: chapter number and [page number] in hyperlinks

1.1.4 Brands

- PROFINET is a registered trademark of PROFIBUS Nutzerorganisation e.V.
- EtherCAT® is a registered trademark and patented technology licensed by Beckhoff Automation GmbH, Germany.
- EtherNet/IP™ is a registered trademark of ODVA, Inc.
- IO-Link is a registered trademark of PROFIBUS Nutzerorganisation e.V.
- ABB is a registered trademark of Asea Brown Boveri Ltd.
- FANUC is a registered trademark of FANUC CORPORATION (Japan).
- UR is a registered trademark of Universal Robots A/S (Denmark).
- YASKAWA is a registered trademark of Kabushiki Kaisha Yaskawa Denki (Japan).

1.1.5 Applicable documents

- General terms and conditions *
- Catalog data sheet for the purchased product *
- Assembly and operating manuals for accessories *
- Declaration of Incorporation/Declaration of Conformity *
- UKCA Declaration of Incorporation/Declaration of Conformity *
- Commissioning instructions:
  - EGU with PROFINET interface *
  - EGU with EtherCAT® interface *
  - EGU with EtherNet/IP™ interface *
  - EGU with IO-Link interface *
  - EGU with Modbus RTU interface *
- Commissioning instructions for robots
  - EGU for ABB Robotics *
  - EGU for Universal Robots e-series *
  - EGU for FANUC CRX series *
  - EGU for Yaskawa YRC 1000micro series *
- REACH information at **schunk.com/SVHC**

The documents labeled with an asterisk (*) can be downloaded from **schunk.com/downloads**.

1.1.6 Sizes

This manual applies to the following sizes:

- EGU 50
- EGU 60
- EGU 70
- EGU 80

1.1.7 Variants

This operating manual applies to the following variations:

- EGU -B: Basic variant
- EGU -M: with Gripping force and position maintenance (GPE)
- EGU -N: without Gripping force and position maintenance (GPE)
- EGU -SD: with dust protection
- EGU -PN: PROFINET
- EGU -EI: EtherNet/IP™
- EGU -EC: EtherCAT®
- EGU -IL: IO-Link

- EGU -MB: Modbus RTU

1.2 Warranty

The warranty is 24 months or a maximum of 5 million cycles BasicGrip*/ 3 million cycles StrongGrip* from the date of delivery from the production facility if used as intended under the following conditions:

- Observe the ambient conditions and operating conditions, ▸ 2.5 [🗋 12]
- Observance of the specified maintenance and lubrication intervals ▸ 9 [🗋 65]

Parts touching the workpiece and wearing parts are not covered by the warranty.

* A cycle consists of a complete gripping process: "Open gripper" and "Close gripper".

1.3 Scope of delivery

The scope of delivery includes:

- Universal gripper, electric EGU in the ordered variant with current firmware
- Safety information (product-specific instructions available online)
- Centering sleeves for gripper assembly
- Centering sleeves for mounting fingers

1.4 Accessories

The following optional accessories can be used for the product, and must be ordered separately:

- Connection cable for logic/power voltage supply
- Connection cable for communication
- Robot-specific adapter plates
- Blow-off nozzle
- Intermediate jaw with compensating base jaw offset
- Finger blanks in aluminum or steel
- Configurable gripper fingers FGR
- Jaw quick-change system BSWS-M and BSWS-R

A wide range of accessories is available for this product.

For information regarding which accessory articles can be used with the corresponding product variants, see catalog data sheet.

2 Basic safety notes

2.1 Appropriate use

The product is designed exclusively for gripping and temporarily holding workpieces or objects.

- The product may only be used within the scope of its technical data, ▸ 3 [🗋 18].
- The product is intended for installation in a machine/ automated system. The applicable guidelines for the machine/ automated system must be observed and complied with.
- The product is intended for industrial and industry-oriented use. Its use outside enclosed spaces is only permitted if suitable protective measures are taken against outdoor exposure. The product is not suitable for use in salty air.
- The product can be used within the permissible load limits and technical data for holding workpieces during simple machining operations, but is not a clamping device according to EN 1550:1997+A1:2008.
- Using the product behind separating protective equipment and on manually operated manipulators is permitted, but using the product above head height is prohibited.
- Use of the product in the direct vicinity of a welding process is only permitted with additional protective measures.
- Appropriate use of the product includes compliance with all instructions in this manual.
- Any use that exceeds or differs from the appropriate use is regarded as misuse.

2.2 Notes for the operator/integrator

- When implementing and operating components in safety-related parts of the control systems, the basic safety principles in accordance with DIN EN ISO 13849-2 apply. The proven safety principals in accordance with DIN EN ISO 13849-2 also apply to categories 1, 2, 3 and 4.
- A suitable technical protective measure, e.g. protective fence, is required for the operation of the product. The technical protective measure must prevent people from accessing the product working area.
- During troubleshooting and maintenance, measures must be taken against unintentional startup.
- SCHUNK recommends the use of electrical components e.g. sensors, controllers etc. according to EN 61000-5-7.

Requirements of gripper fingers

- Make sure that the product and the gripper finger are sufficient in size for the workpiece.
- SCHUNK recommends the use of form-fit gripper fingers to prevent workpiece loss.

2.3 Structural changes

Implementation of structural changes

Modifications, changes or reworking, e.g. additional threads, holes, or safety devices, can damage the product or impair its functionality or safety.

- Structural changes should only be made with the written approval of SCHUNK.

2.4 Spare parts

Use of unauthorized spare parts

Using unauthorized spare parts can endanger personnel and damage the product or cause it to malfunction.

- Only use original spare parts and spares authorized by SCHUNK.

2.5 Ambient conditions and operating conditions

Required ambient conditions and operating conditions

Incorrect ambient and operating conditions can make the product unsafe, leading to the risk of serious injuries, considerable material damage and/or a significant reduction to the product's life span.

- Make sure that the product is only used within its defined application parameters, ▸ 3 [🗋 18].

2.5.1 Ambient conditions

Transport and storage requirements

For transport and storage of product in original packaging, the following requirements apply:

- Loading and unloading with mechanical aids
- Ambient temperature from -40°C to +70°C
- Air humidity up to max. 85%

Operational requirements

The following requirements apply for operation of the product:

- Ambient temperature from +5°C to +55°C
- Air humidity up to max. 65%

According to DIN EN 60068-2-6 and DIN EN 60068-2-27, in accordance with EN 60721-3-2 and EN 60721-3-3, the product was subjected to a vibration and shock inspection during transport and in operation with respect to the ambient influences and withstands the required loads.

The product may only be used in the following locations if additional measures are taken:

- In locations with a high level of ionizing radiation
- In locations with difficult operating conditions, e.g. due to acrid fumes, gases or chemicals
- In facilities requiring special monitoring, e.g. in particularly at-risk areas
- In applications during which the product is exposed to unacceptably severe knocking or vibrations Suitable measures must be taken to reduce the amplitude or acceleration of such disturbances. Vibration-damping or vibration-absorbing systems are to be used in such cases.

The product must also not be used in potentially explosive zones.

2.5.2 Insulation resistance and voltage resistance in accordance with EN 60204-1

When measuring the insulation resistance and inspecting the voltage resistance of the machine/automated system, observe the following information in order to protect the product from damage:

- The electronics are connected to the housing ground, in order to protect against overvoltage.
- For measurements of the insulation resistance in accordance with EN 60204-1, no voltage levels above the permitted operating voltage range may be used. In addition, the maximum measuring current must be safely limited to values below 10mA.
- Before testing the voltage resistance of the machine/ automated system in accordance with EN 60204-1, disconnect the product from the electric circuits to be tested. This applies to all connections on the product:
  - positive and negative connections of the power and logic supply
  - Fieldbus connections

2.6 Personnel qualification

Inadequate qualification of personnel

Any work on the product by inadequately qualified personnel can lead to serious injuries and considerable material damage.

- All work must only be performed by appropriately qualified personnel.
- Personnel must have read and understood the complete manual before beginning any work on the product.
- Observe country-specific accident prevention regulations and the general safety notes.

The following personnel qualifications are required for the various activities on the product:

Qualified electrician Qualified electricians have the professional training, knowledge, and experience to work on electrical systems, to recognize and avoid potential dangers, and know the relevant standards and regulations.

Specialist personnel Specialist personnel have the specialized training, knowledge, and experience to perform the tasks entrusted to them, to recognize and avoid potential dangers, and know the relevant standards and regulations.

Instructed person Instructed persons have been instructed by the operator regarding the tasks entrusted to them and the potential dangers of inappropriate behavior.

Manufacturer's service personnel The manufacturer's service personnel have the specialized training, knowledge, and experience to perform the work entrusted to them and to recognize and avoid potential dangers.

2.7 Personal protective equipment

Use of personal protective equipment

Personal protective equipment serves to protect staff in the event of a danger that may interfere with their health or safety at work.

- When working on and with the product, observe the occupational health and safety regulations and wear the required personal protective equipment.
- Observe the valid safety and accident prevention regulations.
- Wear protective gloves to guard against sharp edges and corners and rough surfaces.
- Wear heat-resistant protective gloves when handling hot surfaces.
- Wear protective gloves and safety goggles when handling hazardous substances.
- Wear close-fitting protective clothing and place a hairnet over long hair when dealing with moving components.

2.8 Notes on safe operation

An incorrect manner of working can make the product unsafe and risks serious injuries and considerable material damage.

- Avoid any manner of working that may interfere with the function and operational safety of the product.
- Use the product as intended.
- Observe the safety notes and assembly instructions.
- Do not expose the product to any corrosive media. Products for special ambient conditions are excluded.
- Rectify malfunctions as soon as they occur.
- Observe the care and maintenance instructions.
- Observe the information on the safety data sheets of the additives and lubricants.
- Observe the current safety, accident prevention, and environmental protection regulations for the application field of the product.

2.9 Transport

Handling during transport

Incorrect handling during transport can make the product unsafe and risks the danger of serious injuries and considerable material damage.

- When handling heavy weights, use lifting equipment to lift the product and transport it by appropriate means.
- During transport and handling, secure the product to prevent it from falling.
- Do not walk under suspended loads.

2.10 Malfunctions

Behavior in case of malfunctions

- Immediately remove the product from operation and report the malfunction to the responsible departments/persons.
- Get appropriately trained personnel to rectify the malfunction.
- Do not recommission the product until the malfunction has been rectified.
- Test the product after a malfunction to establish whether it still functions properly and no increased risks have arisen.

2.11 Fundamental dangers

General

- Observe safety distances.
- Never deactivate safety installations.
- Before commissioning the product, take suitable protective measures to secure the danger zone.
- Disconnect power sources before installation, modification, maintenance, or calibration. Ensure that no residual energy remains in the system.
- If the energy supply is connected, do not move any parts by hand.
- Do not reach into the open mechanism or movement area of the product during operation.

2.11.1 Protection during handling and assembly

Incorrect handling and assembly

Incorrect handling and assembly can make the product unsafe and can risk the danger of serious injuries and considerable material damage.

- All work must only be performed by appropriately qualified personnel.
- Secure the system against accidental operation during all work.
- Observe the relevant accident prevention regulations.
- Use suitable assembly and transport equipment and take precautions to prevent jamming and crushing.

Incorrect lifting of loads

Falling loads can cause serious injuries and even death.

- Stand clear of suspended loads and do not step within their swiveling range.
- Never move loads without supervision.
- Do not leave suspended loads unattended.

2.11.2 Protection during commissioning and operation

Falling or violently ejected components

Falling and ejected components can lead to serious injury or death.

- Take suitable protective measures to secure the danger zone.
- Never step into the danger zone during operation.

2.11.3 Protection against corruption

Unexpected movements of the product

The product—an incomplete machine according to the Machinery Directive—requires a suitably secured environment to meet the requirements of Annex III, No. 1.1.9 (Protection against corruption). Connecting external systems or remote access devices may lead to hazards.

- Ensure that no corruption is possible on the bus system or the higher-level controller.
- The service interface on the product must not be accessible/ must be deactivated.
- Restrict access to the product; only authorized personnel may operate the product.

3 Technical data

3.1 Name plate / engraving

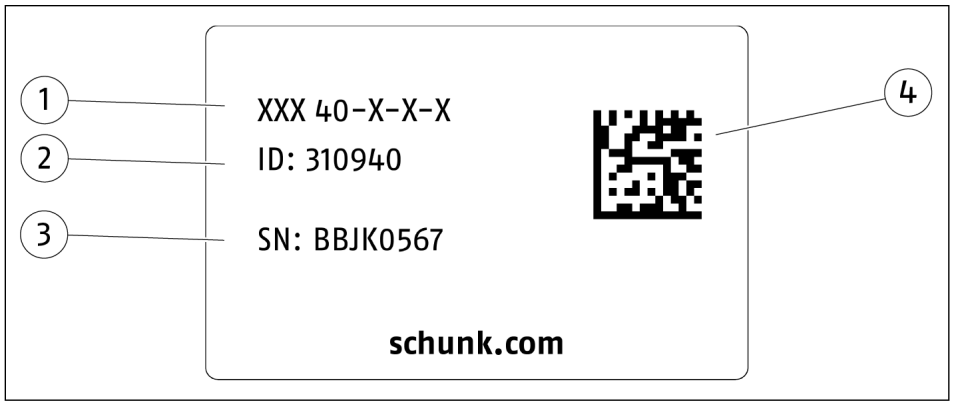

Illustration for illustrative purposes only

1	Product name
2	Identification number
3	Serial number
4	Data Matrix code

Scan the code or enter the serial number online to access additional product information: CAD data, catalog data sheets, declarations, spare parts kits, software updates, and much more.

For more information, visit **schunk.com/serialization**

A separate app may be required for scanning with a mobile phone.

3.2 Mechanical operating data

Weight [kg]

Size	Weight [kg]
50-N	1.44
50-M	1.49
50-N with SD	1.48
50-M with SD	1.52
60-N	2.77
60-M	2.9
60-N with SD	2.83
60-M with SD	2.96
70-N	4.4
70-M	4.52
70-N with SD	4.49
70-M with SD	4.61
80-N	7.58
80-M	7.72
80-N with SD	7.66
80-M with SD	7.8

Nominal gripping force

Size	Nominal gripping force [N]
50	300
60	650
70	1300
80	2000

Minimum gripping force

Size	Min. gripping force [N]
50-M	150
50-N	150
50-SD	210
60	325
70	650
80	1000

Minimum gripping force *

Size	Max. gripping force [N] *	
	Firmware < 5.2	*Firmware ≥ 5.2*
50-M, M with SD	450	600
60-M, M with SD	975	1300
70-M, M with SD	1950	1950
80-M, M with SD	3000	4000

* only available in StrongGrip mode

Point P, finger length

Size	Point P [mm] *	Max. permissible finger length [mm]
50	40	80
60	30	125
70	35	160
80	100	200

* Position of point P see main view in the catalog data sheet.

Edge areas

Size	Usable stroke/jaw [mm] *	
	Positioning	Gripping
50	51	49.8
50 mit SD	46	44.8
60	60	58.6
60 mit SD	55	53.6
70	70	68.4
70 mit SD	65	63.4
80	80	78.2
80 mit SD	75	73.2

NOTE

The edge areas are located directly in front of the software stops at the beginning and end of the available stroke and limit the usable gripping stroke.

Workpieces within these edge areas cannot be gripped by gripping commands. Positioning commands, on the other hand, can be used across the entire stroke.

More technical data is included in the catalog data sheet. Whichever is the latest version.

3.3 Electrical operating data

Logic basic data, all sizes

Logic basic data

Description	Value
Rated voltage [VDC]	24 +/- 10%
Rated current logic [A]	0.16
Max. logic current input [A]	0.20

Power nominal current

Size	Power nominal current [A]		
	BasicGrip	StrongGrip	
		Firmware < 5.2	*Firmware ≥ 5.2*
50-N	0.24	-	-
50-M	0.30	0.48	0.72
60-N	0.78	-	-
60-M	0.84	1.56	2.64
70-N	0.78	-	-
70-M	0.84	1.56	1.56
80-N	0.72	-	-
80-M	0.96	1.80	2.28

Max. power current input

Size	Max. power current input [A]		
	BasicGrip	StrongGrip	
		Firmware < 5.2	*Firmware ≥ 5.2*
50-N	1.23	-	-
50-M	1.44	0.72	1.08
60-N	1.20	-	-
60-M	1.44	2.04	3.24
70-N	1.92	-	-
70-M	2.16	2.76	2.76
80-N	4.2	-	-
80-M	4.56	3.60	4.8

Observe the specific power supply data from the robot manufacturer!

NOTE

The compatibility of the product with the robot depends on the current carrying capacity . For compatibility overview see ▸ 11 [🗋 68].

More technical data is included in the catalog data sheet. Whichever is the latest version.

3.3.1 Starting current behavior

Note: The following information refers to the product's power unit.

The input capacity is 240 µF. This leads to a starting current peak that is dependent on the voltage gradient of the power supply being switched on.

If the power voltage is supplied via switching contacts (relays, contactors), high starting currents can occur for a very short time (<= 1 ms), see the following calculation example.

Example

Example with 5 m connection cable with a conductor cross-section of 1.5 mm²:

$$I = \frac{U}{R} = \frac{U}{R_{Power\ supply\ unit} + R_{Connection\ cable} + R_{Gripper}} = \frac{24\,V}{2\,\Omega + 0{,}1\,\Omega + 0{,}5\,\Omega} = \frac{24\,V}{2{,}6\,\Omega} = 9{,}2\,A$$

- In this example, fault messages can occur in case of active short-circuit monitoring with corresponding sensitivity.
- There is no controlled charging of the DC link capacity; this behaves like a short circuit within the first millisecond.
- No high current peaks occur in the logic supply.

SCHUNK therefore recommends the use of robust industrial power supply units that buffer short-term power fluctuations.

3.4 Positioning and repeat accuracy

Size	Positioning accuracy +/- [mm]	Repeat accuracy (gripping) [mm]	(Positioning, unidirectional) [mm]	(Positioning, bidirectional) [mm]
50	0.2	0.02	0.05	0.15
60	0.4	0.02	0.05	0.3
70	0.4	0.02	0.05	0.3
80	0.4	0.02	0.05	0.15

Repeat accuracy

- Repeat accuracy (Gripping) is defined as the spread of the actual position per jaw during 100 consecutive closing or opening movements on a rigid workpiece or a fixed stop under constant conditions.
- Repeat accuracy (Positioning, unidirectional) is the distribution of the actual position per base jaw during 100 consecutive movements to a target position **from the same direction** under constant conditions.
- Repeat accuracy (Positioning, bidirectional) is the distribution of the actual position per base jaw during 100 consecutive movements to a target position **from both directions** under constant conditions.

Positioning accuracy

- Positioning accuracy is the deviation of the actual position per jaw during 100 consecutive, unidirectional positioning movements to a defined position under constant conditions.

Illustration of positioning and repeat accuracy using the example of a target

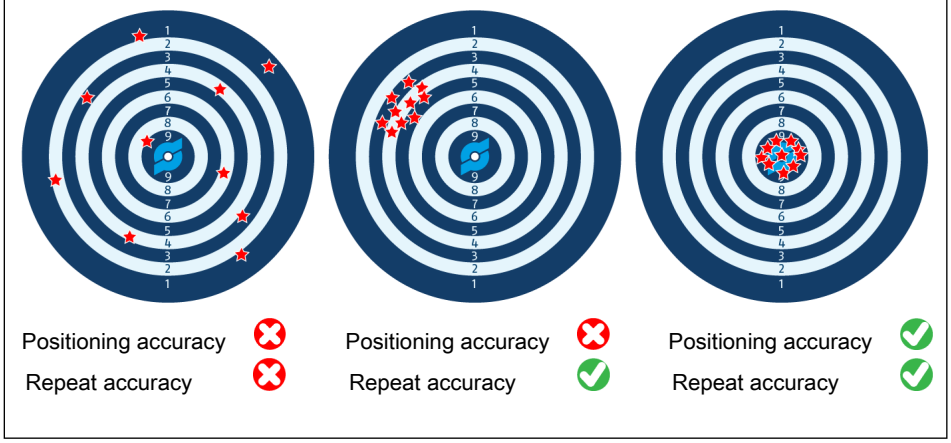

Positioning and repeat accuracy

3.5 Communication interfaces

Name	Value
PROFINET [100 MBit/s]	IRT Class C
EtherCAT® [100 MBit/s]	1 port EtherCAT® with EoE, FoE and CoE – EoE: Ethernet over EtherCAT® – FoE: File over EtherCAT® – CoE: CANopen over EtherCAT®
EtherNet/IP™ [10/100 MBit/s]	1 Port EtherNet/IP™
IO-Link [COM2]	IO-Link (V1.1, Class B)
Modbus RTU [9.6 – 921.6 kbit/s]	Modbus RTU via EIA/TIA-485-A

3.6 Ambient conditions and operating conditions

Description	Value
Noise emission [dB(A)]	≤70
IP protection class Electronics	67 *
IP protection class Guide	
– Version: B	40
– Version: SD	64
Ambient temperature [°C]	
– Min.	5
– Max.	55

* The IP protection of the electronics is only given if all plug connectors have mounted properly. Likewise, the screw for connecting the functional earth must be mounted on the housing, ▶ 5.4.6 [🗋 58].

Blow-off nozzle (optional accessory)

Name	Value
Pressure medium	Compressed air, compressed air quality according to ISO 8573-1:2010 [7:4:4]
Nominal operating pressure [bar]	6
Minimum pressure [bar]	2.5
Maximum pressure [bar]	7
Noise emission [dB(A)]	>70

Tab.: Ambient and operating conditions when using a blow-off nozzle

3.7 Gripping modes

The following gripping modes are available:

- BasicGrip – Operation from minimum gripping force to nominal gripping force
- StrongGrip – Operation up to maximum gripping force

BasicGrip

This gripping mode is available for all variants of the product.

In BasicGrip mode, the workpiece is gripped with the nominal gripping force or less. The motor is permanently energized, which allows the workpieces to be continuously re-gripped.

Note: The gripping velocity changes depending on the set gripping force, ▸ 3.8 [🗋 32].

StrongGrip

This gripping mode is only available for the "M" variant.

In StrongGrip mode, the workpiece is gripped with a gripping force greater than 100 percent, which makes it possible to grip heavy workpieces.

In this mode, the motor briefly activates a higher power level, and an elastomer stores the high gripping force. After an adjustable time, the motor brake engages and the workpiece is held.

For more information on parameterization, see the commissioning instructions, ▸ 1.1.5 [🗋 8].

Note: The gripping velocity remains constant, ▸ 3.8 [🗋 32].

Continuous operation in StrongGrip mode can lead to higher wear of the mechanical components, this has no effect on the technical data of the product.

Pause times

When using the StrongGrip mode, a sufficiently long pause time must be provided between two gripping cycles. Implemented motor protection mechanisms prevent damage to the gripper. In the event of an error, measures can be taken, see ▸ 8.3 [🗋 63].

Note: Due to individual operating modes and application environments, the pause times must be determined empirically. For a gripping cycle with a maximum gripping force and a re-gripping time of two seconds, a pause time of ten seconds is recommended at an ambient temperature of 25°C.

3.8 Diagrams

NOTE

The dependency of gripping force on finger length is shown in the diagrams below. The range shown has been determined with a standardized SCHUNK test finger. The gripping force attainable for a specific workpiece depends on the design of the gripper finger.

The gripping force diagrams show the achievable gripping force range with a selected finger length. The gripping force can be specified as a percentage between F_{min} and F_{max}. For further information, see the commissioning instructions for the various interfaces, ▸ 1.1.5 [🗋 8].

The specified gripping force is the force that the gripper applies at point P and that it can hold continuously. The position of point P is indicated in the main view in the catalog data sheet.

To determine the nominal gripping force, the product is mounted without additional heat dissipation. The product can hold this nominal gripping force up to an ambient temperature of 55°C. A temperature malfunction may occur if the product reaches excessively high temperatures. For measures to avoid an excess temperature fault, see chapter ▸ 5 [🗋 42].

EGU 50

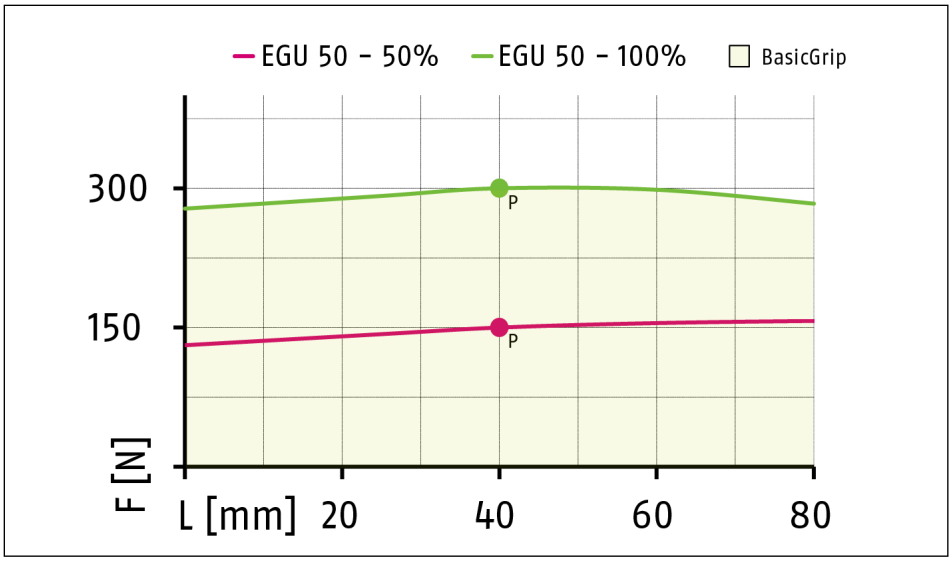

Gripping force diagram EGU 50

F [N]	Gripping force	L [mm]	Finger length

EGU 50-M, firmware < 5.2

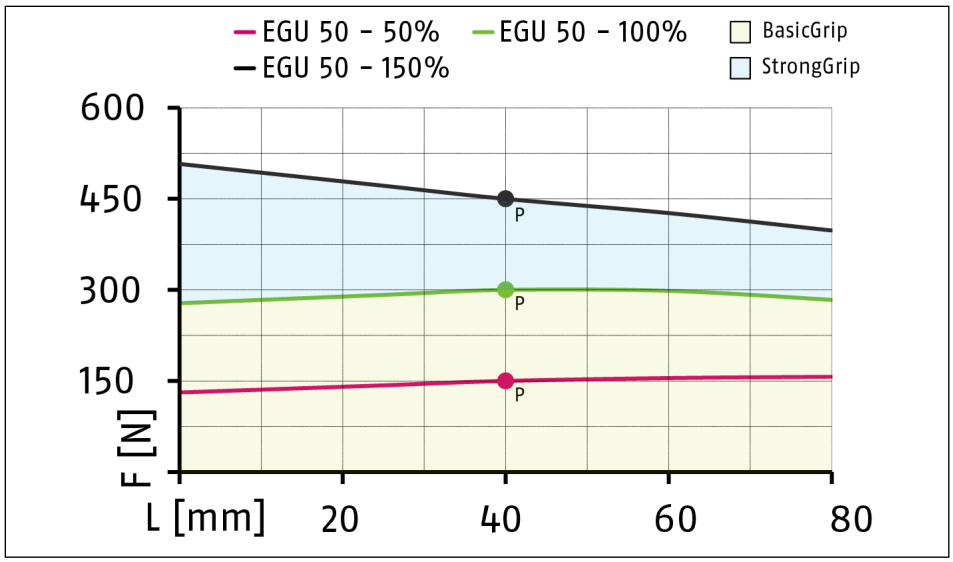

Gripping force diagram EGU 50-M (with Gripping force and position maintenance (GPE)), firmware < 5.2

F [N]	Gripping force	L [mm]	Finger length

EGU 50-M, firmware ≥ 5.2

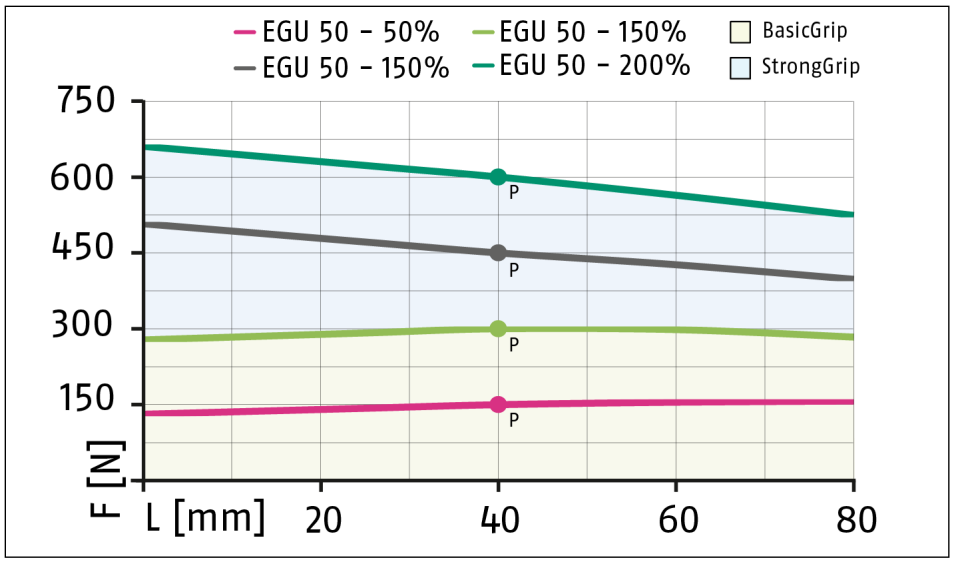

Gripping force diagram EGU 50-M (with Gripping force and position maintenance (GPE)), firmware ≥ 5.2

F [N]	Gripping force	L [mm]	Finger length

EGU 60

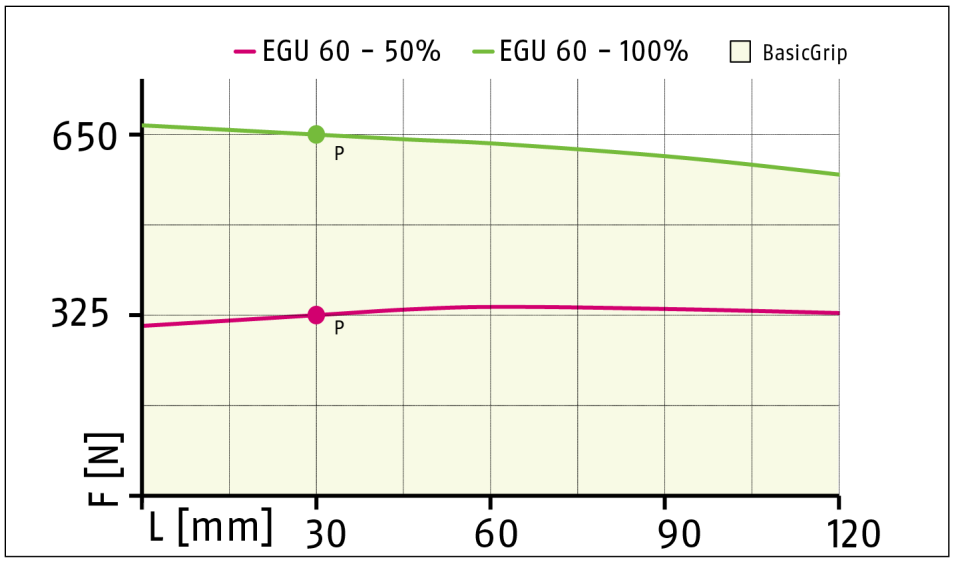

Gripping force diagram EGU 60

F [N]	Gripping force	L [mm]	Finger length

EGU 60-M, firmware < 5.2

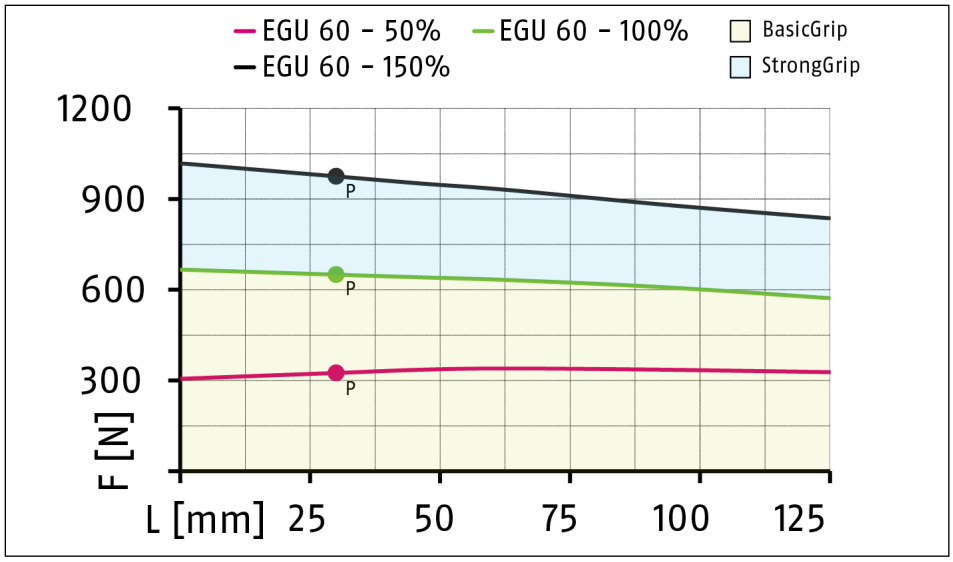

Gripping force diagram EGU 60-M (with Gripping force and position maintenance (GPE)), firmware < 5.2

F [N]	Gripping force	L [mm]	Finger length

EGU 60-M, firmware ≥ 5.2

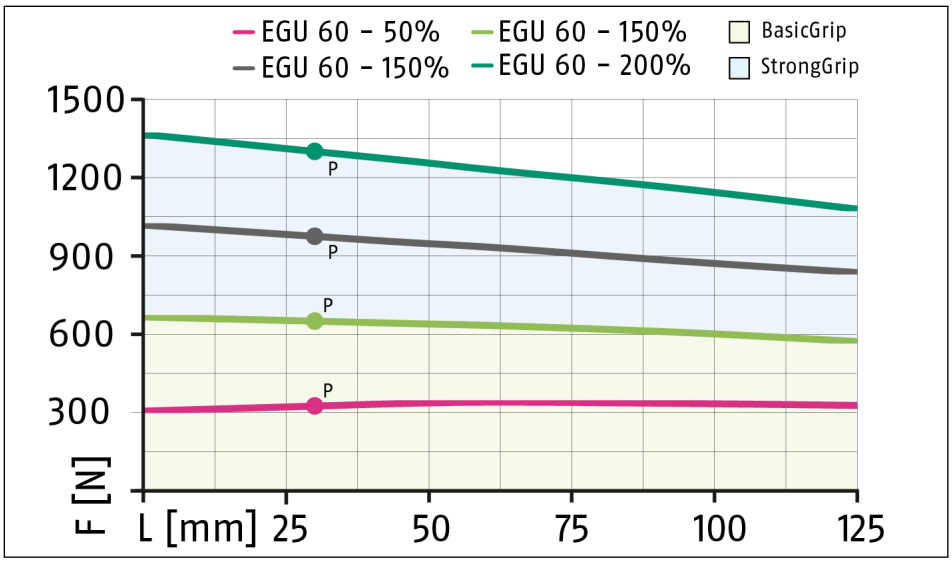

Gripping force diagram EGU 60- M (with Gripping force and position maintenance (GPE)), firmware ≥ 5.2

F [N]	Gripping force	L [mm]	Finger length

EGU 70

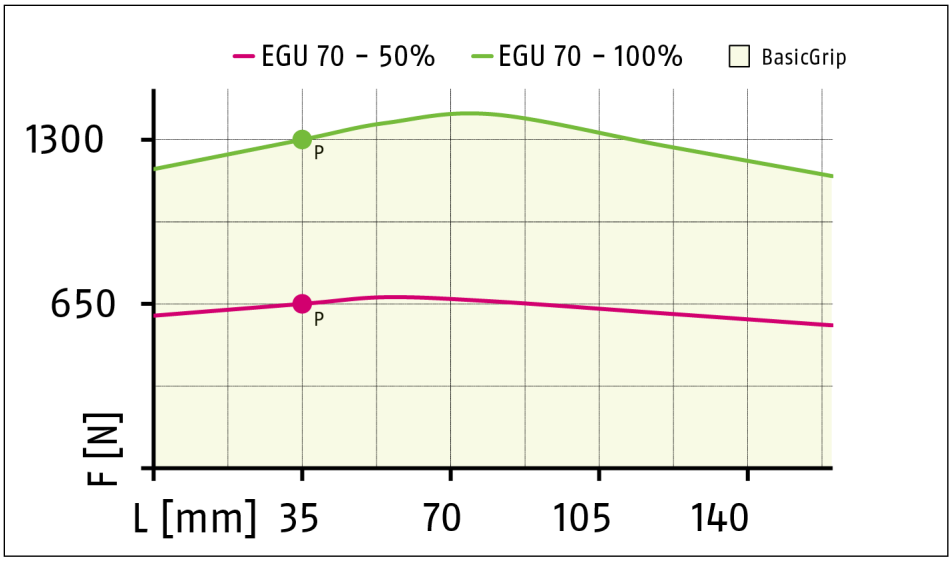

Gripping force diagram EGU 70

F [N]	Gripping force	L [mm]	Finger length

EGU 70-M, firmware ≥ 5.1

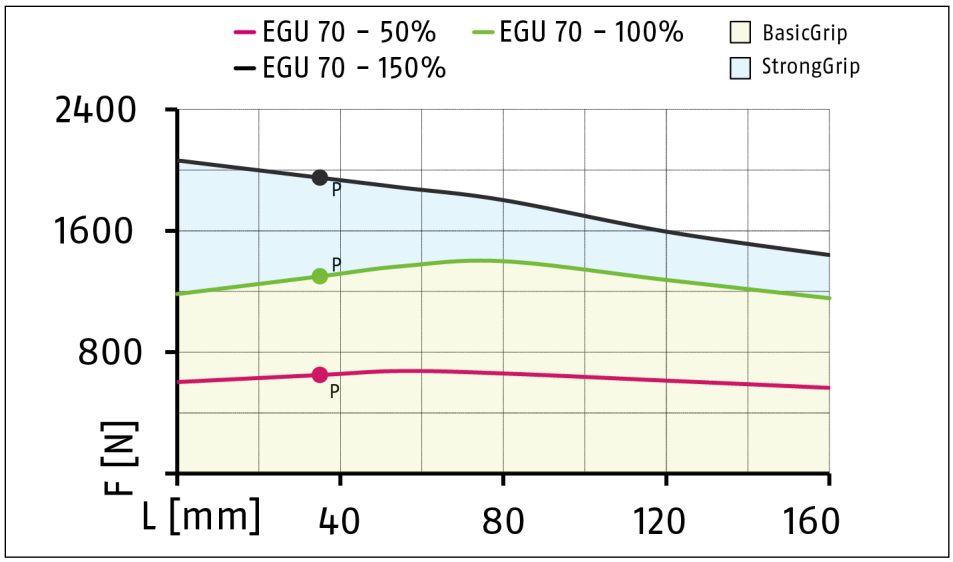

Gripping force diagram EGU 70-M (with Gripping force and position maintenance (GPE)), firmware ≥ 5.1

F [N]	Gripping force	L [mm]	Finger length

EGU 80

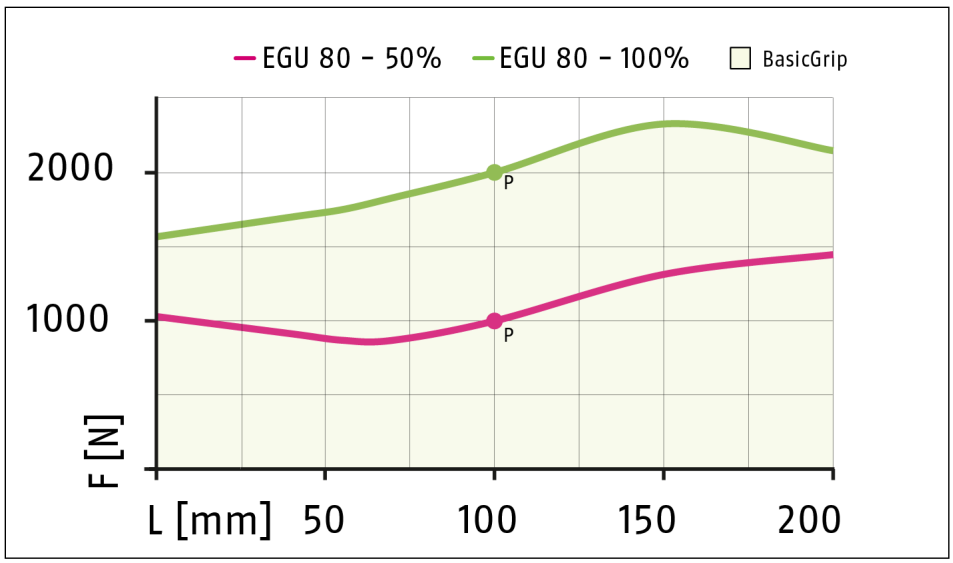

Gripping force diagram EGU 80

F [N]	Gripping force	L [mm]	Finger length

EGU 80-M, firmware < 5.2

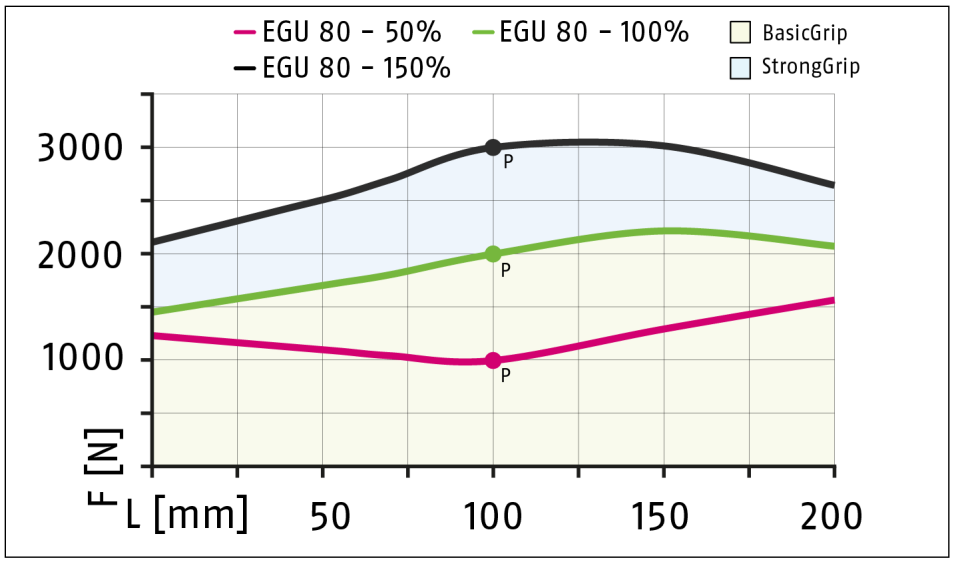

Gripping force diagram EGU 80-M (with Gripping force and position maintenance (GPE)), firmware < 5.2

F [N]	Gripping force	L [mm]	Finger length

EGU 80-M, firmware ≥ 5.2

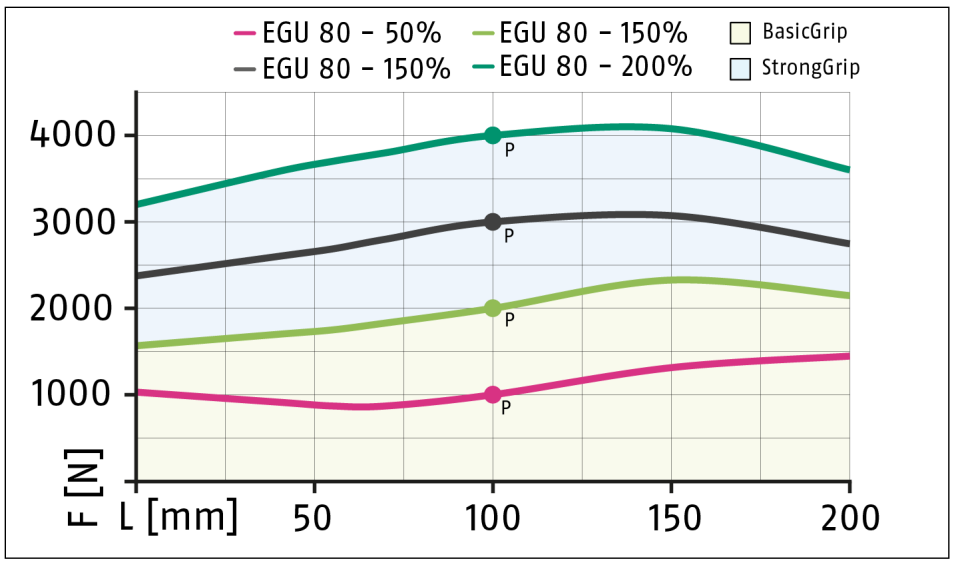

Gripping force diagram EGU 80-M (with Gripping force and position maintenance (GPE)), firmware ≥ 5.2

F [N]	Gripping force	L [mm]	Finger length

Gripping velocity as a function of gripping force

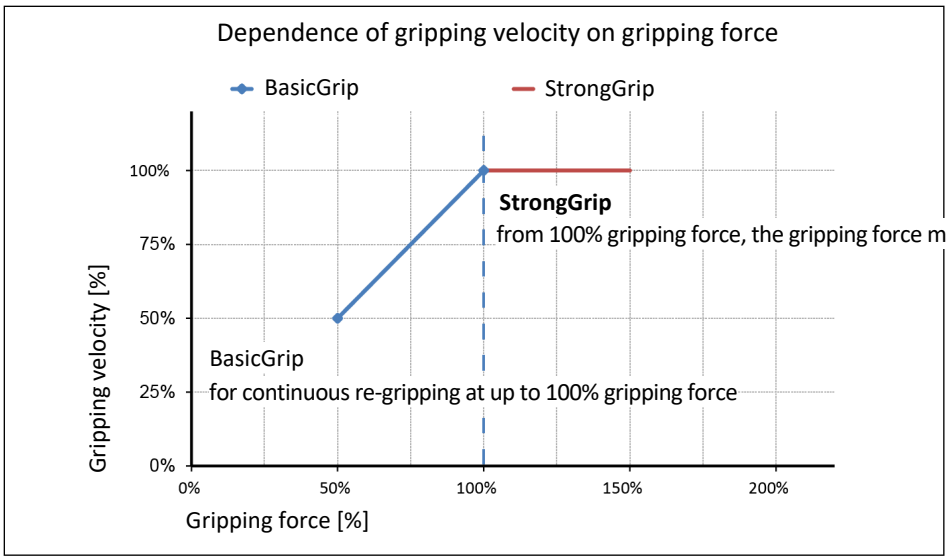

Gripping force-velocity diagram EGU

Description	Value
Min. Gripping velocity BasicGrip [mm/s]	12.5
Max. Gripping velocity [mm/s]	25

3.9 Auxiliary materials and lubricants

Component	Manufacturer	Name Lubricant/ auxiliary materials
Gears, plain bearings	smartGLEIT GmbH Blütenstrasse 62 – 64 86558 Hohenwart / OT Koppenbach **www.smartgleit.com**	smartGLEIT FSV 765*
Guides	smartGLEIT GmbH Blütenstrasse 62 – 64 86558 Hohenwart / OT Koppenbach **www.smartgleit.com**	smartGLEIT FSV 765*
Seals	Bremer & Leguil GmbH Am Burgacker 30 – 42 47051 Duisburg info@bremer-leguil.de **www.bremer-leguil.de**	SCHUNK grease 1

* non-food-compliant lubricant

Details on the SCHUNK lubricant designations are available at **schunk.com/lubricants**.

The product contains food-compliant lubricants and non-food-compliant lubricants as standard.
The requirements of standard EN 1672-2:2020 are not fully met.

NOTE

- Change contaminated food-compliant lubricant.
- Observe information in the safety data sheet from the lubricant manufacturer.

4 Design and description

4.1 Design

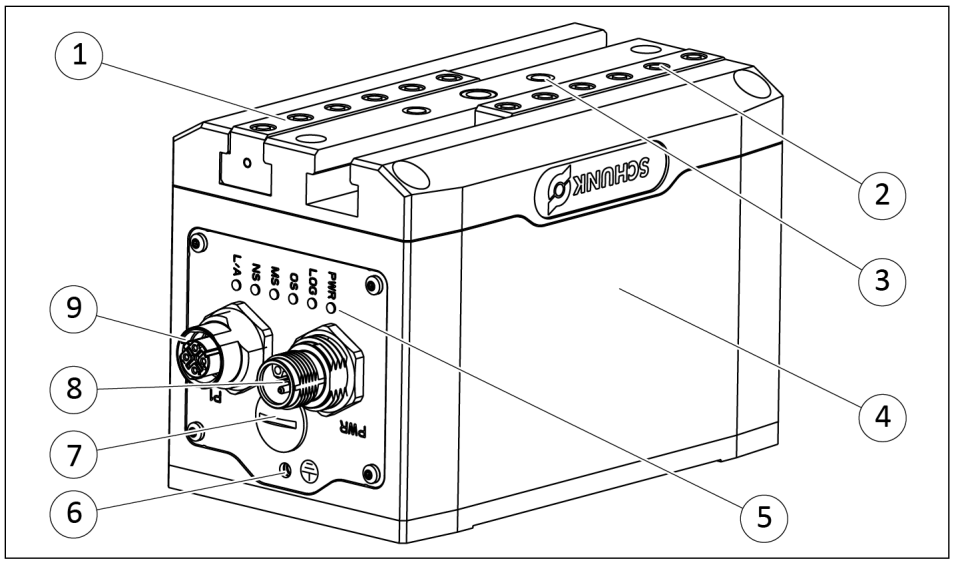

Universal gripper, electric EGU, example variant PROFINET

1	Base jaw
2	Hole for centering sleeve, gripper finger connection
3	Connection for customer attachments
4	Housing
5	LED status display
6	Connection for functional ground
7	Service interface (only for SCHUNK service technicians)
8	Connection cable for logic/power voltage supply PWR
9	Connection for communication P1

4.2 Description

Versatile 2-finger universal gripper for the highest level of workpiece variety with maximum robustness

- The product is controlled via one of the following interfaces: PROFINET, EtherCAT®, EtherNet/IP™, IO-Link or Modbus RTU
- The "M" variant has a system for gripping force and position maintenance, while the "SD" variant has additional dust protection integrated.
- Only SCHUNK service engineers may access the service interface. The cover must not be removed.

4.3 Displays and control elements

4.3.1 LED status display PROFINET

The status values of the product are displayed via the LED status display.

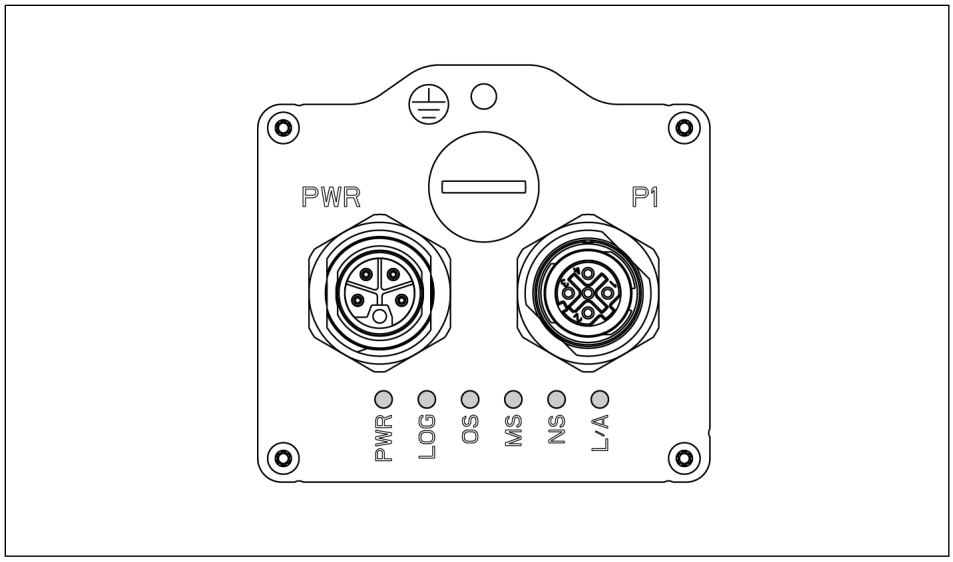

LED, PROFINET

LED	Description	Color	Function
PWR	Supply power	Green	**LED off:** No supply voltage is present on the power section.
			LED lights up green: Supply voltage is present on the power section.
LOG	Supply logic	Green	**LED off:** No supply voltage present on the logic section.
			LED lights up green: Supply voltage is present on the logic section.
OS	Operation status	Red/ Green	**LED off:** No feedback from the product.
			LED lights up green: The product is ready for operation.
			LED lights up red: The product is in an error state.
MS	Module status	Red/ Green	**LED off:** The product is in setup or NW_Init status (NW_Init Status = initialization state).
			LED lights up green: The product is in normal operating mode.
			LED flashes green x1: The product is currently processing diagnostics processes.
			LED lights up red: Serious error. The product is not ready for operation.
NS	Network status	Red/ Green	**LED off:** No connection to the control system available.
			LED lights up green: Connection to the control system present and control system is in "Run" mode.

LED	Description	Color	Function
NS			**LED flashes green x1:** Connection to the control system present and control system is in "Stop" mode. The IRT synchronization is not yet finished.
			LED flashes green continuously: The network participant is in identification mode.
			LED lights up red: Serious network error present.
			LED lights up red x1: The station name is not known.
			LED lights up red x2: The IP address is not known.
			LED lights up red x3: A configuration error is present.
L/A	Link/Activity	Green	**LED off:** Connection inactive, communication inactive
			LED lights up green: Connection active, communication inactive
			LED flashes quickly: Connection active, communication active

4.3.2 LED status display EtherNet/IP™

The status values of the product are displayed via the LED status display.

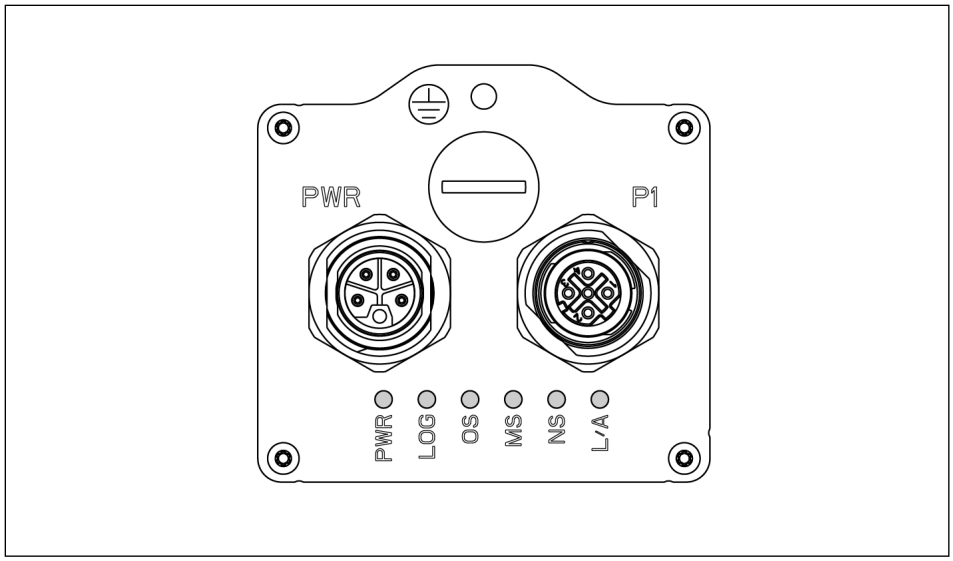

LED, EtherNet/IP™

LED	Description	Color	Function
PWR	Supply power	Green	**LED off:** No supply voltage is present on the power section.
			LED lights up green: Supply voltage is present on the power section.
LOG	Supply logic	Green	**LED off:** No supply voltage present on the logic section.
			LED lights up green: Supply voltage is present on the logic section.

LED	Description	Color	Function
OS	Operation status	Red/ Green	**LED off:** No feedback from the product.
			LED lights up green: The product is ready for operation.
			LED lights up red: The product is in an error state.
MS	Module status	Red/ Green	**LED off:** No supply voltage present.
			LED lights up green: Controlled by a scanner in operating mode.
			LED flashes green: The product is not configured, scanner in sleep mode.
			LED lights up red: Serious error. The product is not ready for operation.
			LED flashes red: Removable malfunction/errors. The product is configured, but the stored parameters differ from the parameters currently in use.
NS	Network status	Red/ Green	**LED off:** No supply voltage present and/or no IP address.
			LED lights up green: Product is online. One or more connections are/have been established (CIP™ Class 1 or 3)
			LED flashes green: Product is online, but has not yet established a connection.
			LED lights up red: Duplicate network address present. Serious network error present.
			LED flashes red: Timeout for one or more connections.
L/A	Link/Activity	Green	**LED off:** Connection inactive, communication inactive
			LED lights up green: Connection active, communication inactive
			LED flashes quickly: Connection active, communication active

4.3.3 LED status display EtherCAT®

The status values of the product are displayed via the LED status display.

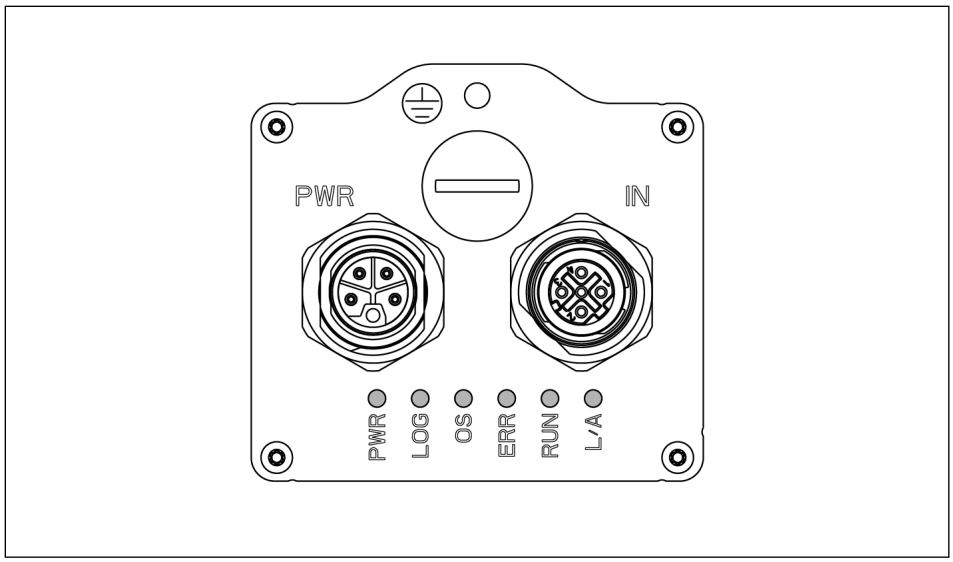

LED, EtherCAT®

LED	Description	Color	Function
PWR	Supply power	Green	**LED off:** No supply voltage is present on the power section.
			LED lights up green: Supply voltage is present on the power section.
LOG	Supply logic	Green	**LED off:** No supply voltage present on the logic section.
			LED lights up green: Supply voltage is present on the logic section.
OS	Operation status	Red/ Green	**LED off:** No feedback from the product.
			LED lights up green: The product is ready for operation.
			LED lights up red: The product is in an error state.
ERR	Error LED	Red	**LED off:** No supply voltage present and/or no error.
			LED flashes red: Invalid configuration. The status change requested by the master is not possible due to invalid register or object settings.
			LED flashes single red: Unrequested status change. Device has changed the EtherCAT®-status independently.
			LED flashes double red: Timeout of the Sync Manager Watchdog
			LED lights up red: A serious fault is present. The bus interface has been put into a physically passive state. Contact SCHUNK Service.
			LED flickers: Boot error, e.g. due to a failed firmware download

LED	Description	Color	Function
RUN	Run LED	Red/ Green	**LED off:** No supply voltage on and/or EtherCAT®-Device in 'INIT' state.
			LED lights up green: EtherCAT®-Device is in 'OPERATIONAL' state.
			LED flashes green: EtherCAT®-Device is in 'PRE-OPERATIONAL' state.
			LED flashes single green: EtherCAT®-Device is in 'OPERATIONAL' state.
			LED flickers: EtherCAT®-Device is in 'BOOT' state.
			LED lights up red: A serious fault is present. The bus interface has been put into a physically passive state. Contact SCHUNK Service.
L/A	Link/Activity	Green	**LED off:** Connection inactive, communication inactive
			LED lights up green: Connection active, communication inactive
			LED flashes quickly: Connection active, communication active

4.3.4 LED status display IO-Link

The status values of the product are displayed via the LED status display.

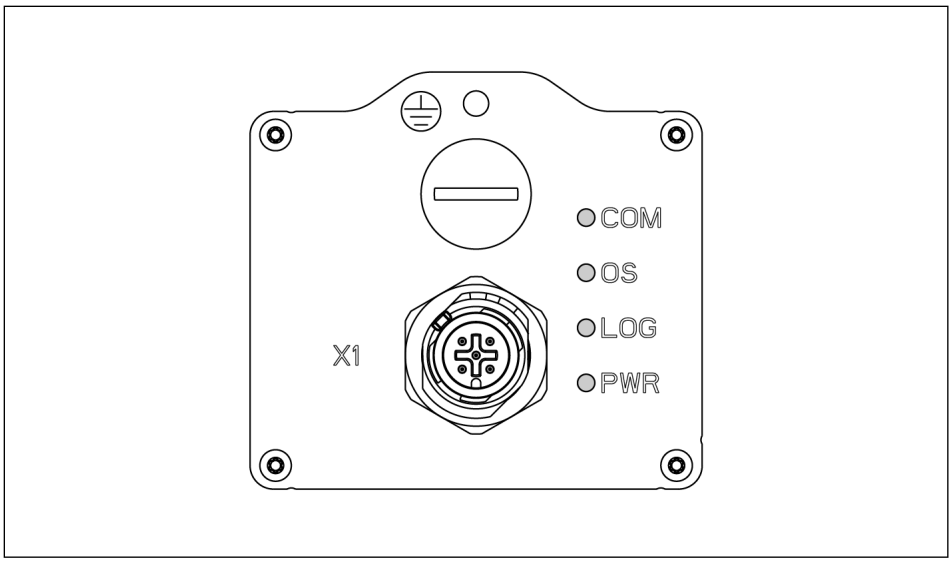

LED IO-Link

LED	Description	Color	Function
PWR	Supply power	Green	**LED off:** No supply voltage is present on the power section.
			LED lights up green: Supply voltage is present on the power section.
LOG	Supply logic	Green	**LED off:** No supply voltage present on the logic section.
			LED lights up green: Supply voltage is present on the logic section.
OS	Operation status	Red/ Green	**LED off:** No feedback from the product.
			LED lights up green: The product is ready for operation.
			LED lights up red: The product is in an error state.
COM	Communica-tion status	Green	**LED off:** Connection inactive, communication inactive.
			LED lights up green: Connection active, communication inactive.
			LED flashes green: Connection active, communication active.

4.3.5 LED status display Modbus RTU

The status values of the product are displayed via the LED status display.

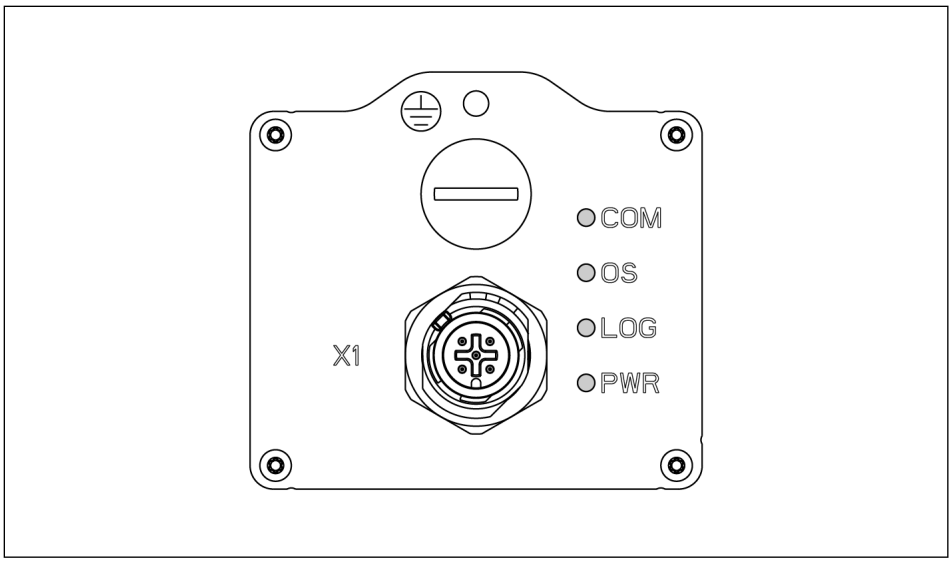

LED Modbus RTU

LED	Description	Color	Function
PWR	Supply power	Green	**LED off:** No supply voltage is present on the power section.
			LED lights up green: Supply voltage is present on the power section.
LOG	Supply logic	Green	**LED off:** No supply voltage present on the logic section.
			LED lights up green: Supply voltage is present on the logic section.
OS	Operation status	Red/ Green	**LED off:** No feedback from the product.
			LED lights up green: The product is ready for operation.
			LED lights up red: The product is in an error state.
COM	Communica-tion status	Yellow	**LED off:** Connection inactive, communication inactive.
			LED lights up yellow: Connection active, communication inactive.
			LED flashing yellow: Connection active, communication active.

5 Assembly and settings

5.1 Safety



⚠ WARNING

Risk of injury due to sudden movements!

If the energy supply is switched on, or if residual energy is still present in the system, this can cause components to move unexpectedly, which may result in serious injuries.

- Before starting any work on the product: Switch off the energy supply and secure against re-connection.
- Ensure that no residual energy remains in the system.

5.2 Installing and connecting

NOTE

A temperature malfunction may occur if the product reaches excessively high temperatures.

- Ensure sufficient heat dissipation via the customer's mounting surface.
- Mount the product so that sufficient cooling is guaranteed.
- The size of the cooling surface depends on the application. Avoid exposure to additional heat e.g. caused by attachments or by the attached axles.

Overview

1. Check the flatness of the mounting surface, ▸ 5.3 [🗋 45].
2. Choose the installation position so that connection cables are neither damaged nor wrap around the product when swiveling.
3. Screw the product to the machine/system, ▸ 5.3 [🗋 45].
   OR: Secure the product to the robot, ▸ 5.2.1 [🗋 43].
   - ⇨ Use suitable connecting elements (adapter plates) if necessary.
     If required, adapter plates can be requested from SCHUNK.
   - ⇨ Observe maximum tightening torque, depth of engagement and if required strength class.
4. If necessary, secure intermediate jaws to the base jaws, ▸ 5.3 [🗋 48].
   Note: The intermediate jaws compensate the side offset of the base jaws in the Y direction and enable an aligned connection.

5. Secure the gripper fingers to the intermediate jaws or base jaws, ▸ 5.3 [🗋 45].
   ⇨ Observe maximum tightening torque, depth of engagement and if required strength class.
6. If necessary, fasten any attachments such as a pressure element to the housing, ▸ 5.3 [🗋 49].
7. Connect the functional ground cable between the product and the machine/system, ▸ 5.4 [🗋 50].
8. Plug the cable for communication and voltage supply into the socket and screw the threaded ring in by hand, ▸ 5.4 [🗋 50]. Observe the maximum tightening torque, ▸ 5.4.2 [🗋 53].
9. Make sure that the connections are not stressed due to tensile and pressure forces. Apply appropriate strain relief devices if required.

5.2.1 Securing the product to the robot

SCHUNK provides robot adaptation packages as accessories for mounting the product on robots. These packages include matching screws, centering pins and centering collar for fastening to the desired robot flange. For more information, see the catalog data sheet at **schunk.com**.

Single gripper (SG)

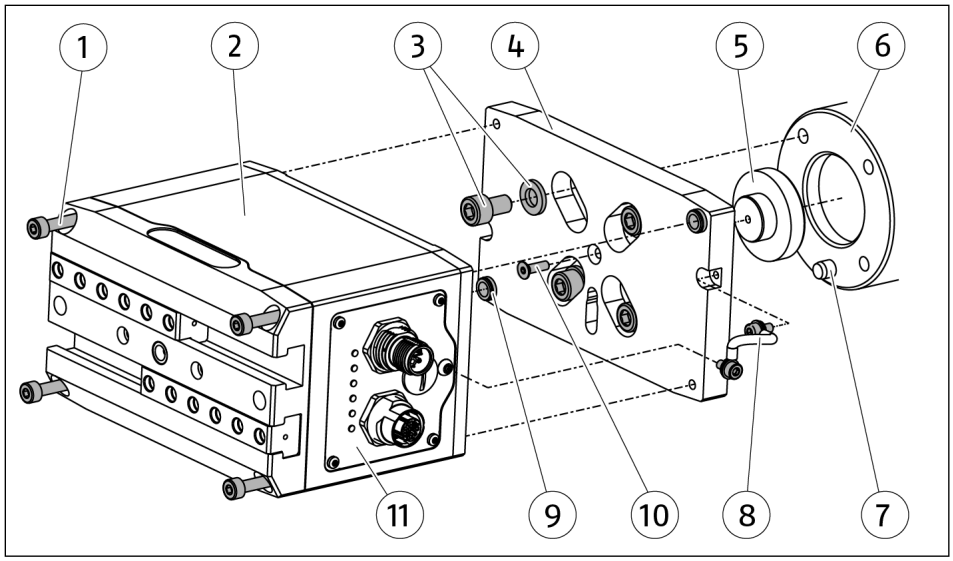

EGU-SG: Mounting on the robot

1. Insert centering pin (7) in robot flange (6).
2. Mount centering collar (5) with screw (10) on adapter plate (4).
3. Fasten adapter plate (4) to robot flange (6) with screws (3) and, if necessary, with washers.
4. Mount the functional earth (8) cable to the adapter plate (4) with screw and toothed lock washer.

5. Insert centering sleeves (9) into adapter plate (4).
6. Fasten the product (2) to the adapter plate (4) with screws (1). Note: Circuit board (11) and functional earth cable (8) must be on the same side.
7. Connect the functional earth cable (8) to the equipotential bonding of the product using a screw and toothed lock washer.

Double gripper (DG)

Note: When used as a double gripper, a blow-off nozzle can be mounted. In the process, the outgoing air from the blow-off nozzle cleans the workpiece of chips or other impurities.

Blow-off nozzle and cable holder are available as accessories from SCHUNK, see catalog data sheet at **schunk.com**.

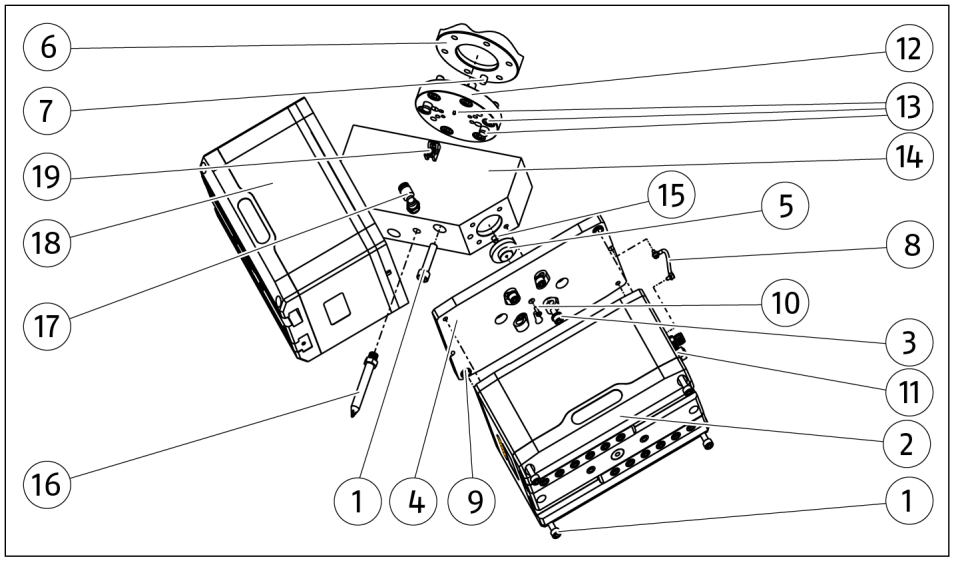

EGU-DG: Mounting on the robot

1. Insert centering pin (7) in robot flange (6).
2. Fasten ISO flange (12) to the robot flange (6) using screws (13).
3. Insert centering pins (13) in ISO flange (12).
4. Fasten elbow adapter (14) with screws (1) to ISO flange (12) in correct position.
5. Insert centering pin (15) into elbow adapter (14).
6. Mount centering collar (5) with screw (10) on adapter plate (4).
7. Fasten the adapter plate (4) with screws (3) and if necessary with washers to the elbow adapter (14).
8. Mount the functional earth (8) cable to the adapter plate (4) with screw and toothed lock washer. Make sure that the functional earth cable (8) points outwards.
9. Insert centering sleeves (9) into adapter plate (4).

10. Fasten the product (2) to the adapter plate (4) with screws (1). Note: Circuit board (11) and functional earth cable (8) must be on the same side.
11. Connect the functional earth cable (8) to the equipotential bonding of the product using a screw and toothed lock washer.
12. Mount the second gripper (18) to the elbow adapter (14) in the same way.
13. Optional: Glue the blow-off nozzle (16) with the enclosed O-ring into the Z-axis of the elbow adapter (14) with liquid, medium-strength threadlocker (tightening torque 1 Nm). Screw the elbow fitting (17) into the elbow adapter (14).
14. Optional: Fasten cable holder (19) to elbow adapter (14) with enclosed screw.

5.3 Mechanical connection

Evenness of the mounting surface

The values apply to the whole mounting surface to which the product is mounted.

Edge length	Permissible unevenness
< 100	< 0.02
> 100	< 0.05

Tab.: Requirements for evenness of the mounting surface (Dimensions in mm)

Connections on the housing

The product can be assembled from two sides.

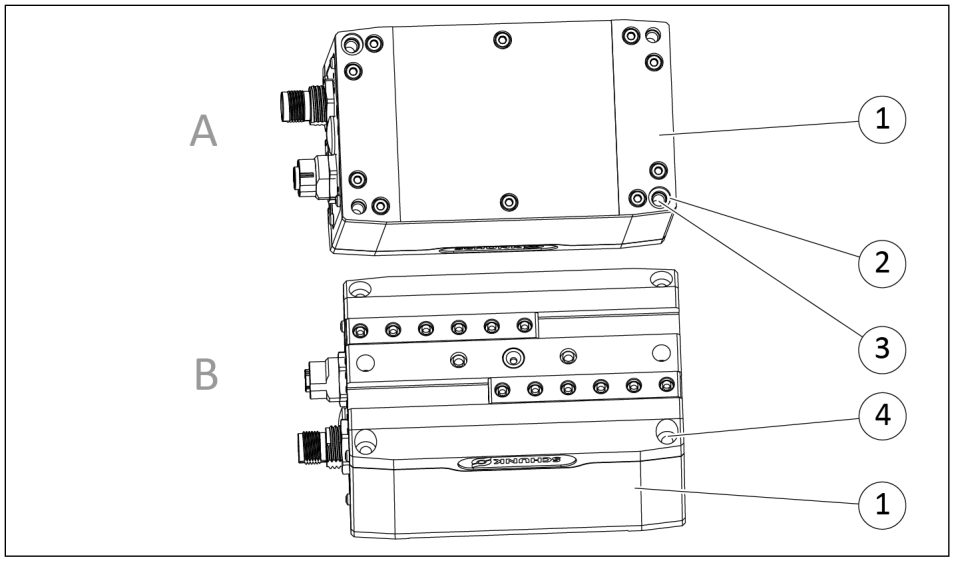

Connections on the housing

1	Housing	3	Hole for Fastening screw
2	Hole for Centering sleeve	4	Hole for Fastening screw

Side A

Tab.: Assembly of the product on side A

Size	③ Screws, Strength class 8.8				② Centering sleeves	
	Thread	Quantity [piece]	Depth of engagement [mm] Min. / Max.	Tightening torque [Nm]	Ø [mm]	Quantity [piece]
50	M5	4	15 / 20	6.1	8	2
60	M5	4	18 / 23	6.1	8	2
70	M6	4	18 / 23	10	10	2
80	M8	4	25 / 30	25	12	2

Side B

Tab.: Assembly of the product on side B

Size	④ Screws according to standard DIN EN ISO 4762, Strength class 12.9				② Centering sleeves	
	Thread	Quantity [piece]	Recommended screw length [mm]	Tightening torque [Nm]	Ø [mm]	Quantity [piece]
50	M4	4	80	5.3	8	2
60	M4	4	100	5.3	8	2
70	M5	4	110	11	10	2
80	M6	4	120	18	12	2

Connections to the base jaws

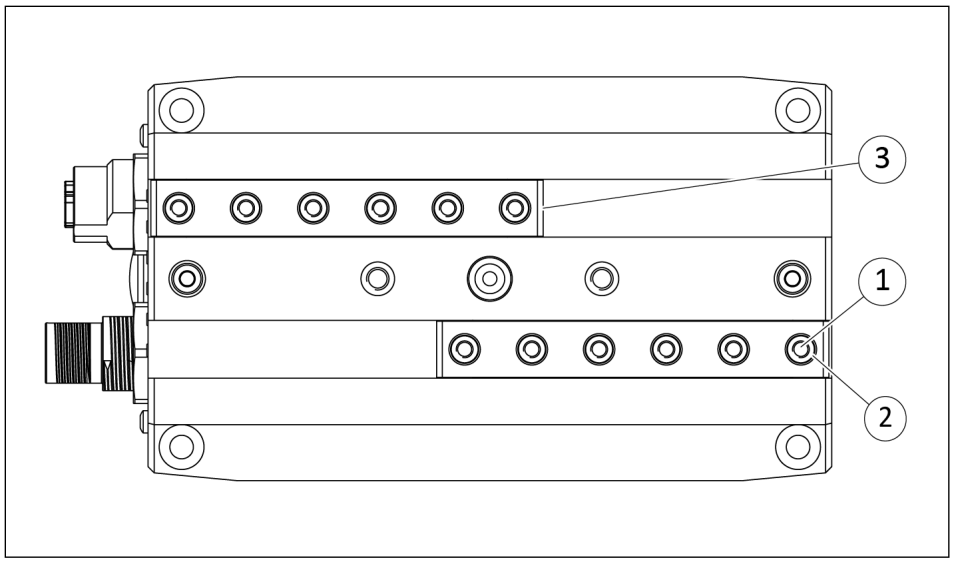

Connections to the base jaws

1	Thread for Fastening screw	2	Hole for Centering sleeve
3	Hole for dust cover *		

* The holes in the front of the base jaws are intended exclusively for fastening the dust cover. The dust protection is mounted by SCHUNK at the factory.

Tab.: Assembling gripper fingers on base jaws

Size	① Screws, Strength class 12.9				② Centering sleeves	
	Thread	Quantity [piece] Min. / Max.	Depth of engagement [mm] Min. / Max.	Tightening torque [Nm]	Ø [mm]	Quantity [piece]
50	M3	3 / 6	6 / 8.5	2.1	5	3
50-SD	M3	3 / 4	11.5 / 14	2.1	5	3
60	M4	3 / 6	8 / 10	5.3	6	3
60-SD	M4	3 / 4	14.5 / 16.5	5.3	6	3
70	M5	4 / 6	9 / 10	11	8	4
70-SD	M5	4 / 4	16 / 17	11	8	4
80	M6	4 / 6	11 / 14	18	10	4
80-SD	M6	4 / 4	19.5 / 22.5	18	10	4

Connections on the intermediate jaws

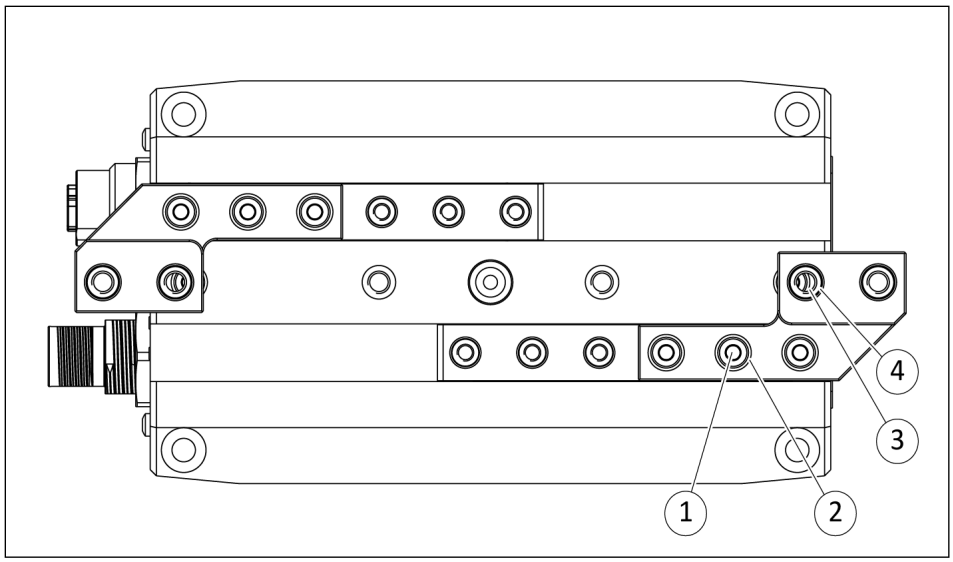

Connections on the intermediate jaws

1	Hole for mounting the intermediate jaw	2	Hole for Centering sleeve
3	Thread for assembling the gripper fingers	4	Hole for Centering sleeve

NOTE

For size 80 with a gripping force >150%, the max. finger length with intermediate jaw is limited to 150 mm.

Tab.: Assembly of intermediate jaws and gripper fingers

Size	① Screwsaccording to standard DIN EN ISO 4762, Strength class 12.9			② Centering sleeves	③ Screws, Strength class 12.9		④ Centering sleeves
	piece x thread	Recom-mended screw length [mm]	Tighten-ing torque [Nm]	piece x Ø [mm]	piece x thread	Depth of engagement [mm] Min. / Max.	piece x Ø [mm]
50	3 x M3	12	2.1	3 x 5	2 x M4	8 / 16	2 x 6
50-SD	3 x M3	18	2.1	3 x 5	2 x M4	8 / 16	2 x 6
60	3 x M4	16	5.3	3 x 6	2 x M6	13 / 18	2 x 10
60-SD	3 x M4	25	5.3	3 x 6	2 x M6	13 / 18	2 x 10
70	4 x M5	18	11	4 x 8	2 x M6	13 / 18	2 x 10
70-SD	4 x M5	25	11	4 x 8	2 x M6	13 / 18	2 x 10
80	4 x M6	20	18	4 x 10	2 x M10	15 / 85	2 x 14
80-SD	4 x M6	30	18	4 x 10	2 x M10	15 / 85	2 x 14

Connections for attachments

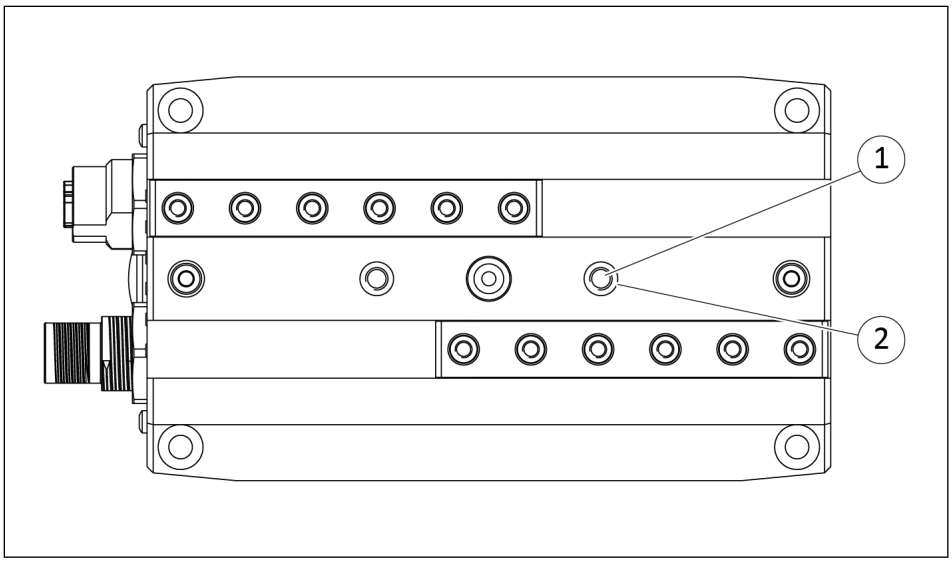

Connections for attachments

1	Thread for Fastening screw	2	Hole for Centering sleeve

Tab.: Assembling the attachments

Size	① Screws				② Centering sleeves	
	Thread	Quantity [piece]	Max. Depth of engagement [mm]	Tightening torque [Nm]	Ø [mm]	Quan-tity [piece]
50	M4	2	10	2.2	6	2
60	M4	2	9	2.2	6	2
70	M5	2	11	4.3	8	2
80	M6	2	13	7.3	10	2

5.4 Electrical connection

NOTICE

Risk of damage to the electronics!

A faulty connection can cause damage to the internal electronics.

- The supply network must be a network of type "PELV" for power and logic.
- Observe the PIN assignment of the connecting terminals.
- Make sure that all components are grounded correctly.

NOTE

Regenerative energy recovery systems for sizes 50 and 70

During operation, energy can be temporarily fed back into the supply via the power unit. Regenerative energy recovery mainly occurs during braking operations in the product positioning mode. Increased travel speed of the gripper fingers enhances this effect.

- The power supply unit must have a regenerative capacity of at least 30 V.

NOTE

Regenerative energy recovery systems for sizes 60 and 80

No significant energy recovery occurs during operation.

- The power unit is completely electrically isolated internally from the logic section (isolation voltage 500 V). This does not apply to the Modbus RTU variant.

5.4.1 PIN allocation

5.4.1.1 PROFINET, EtherNet/IP™, EtherCAT®

Voltage supply

The voltage supply is realized via an L-coded M12 connector.

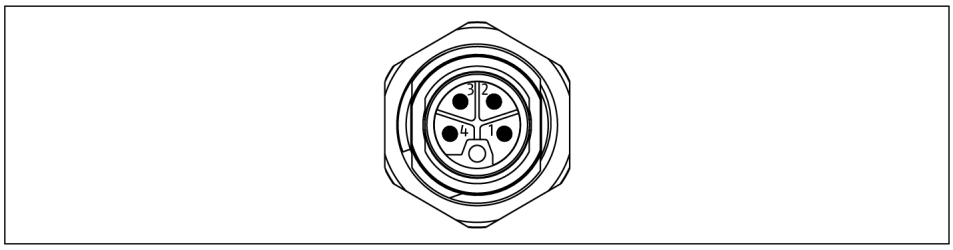

EGU - PWR PIN allocation connector, voltage supply

1	+24 V Logic
2	GND Power
3	GND Logic
4	+24 V Power

Communication

The communication interface is realized via a D-coded M12 socket.

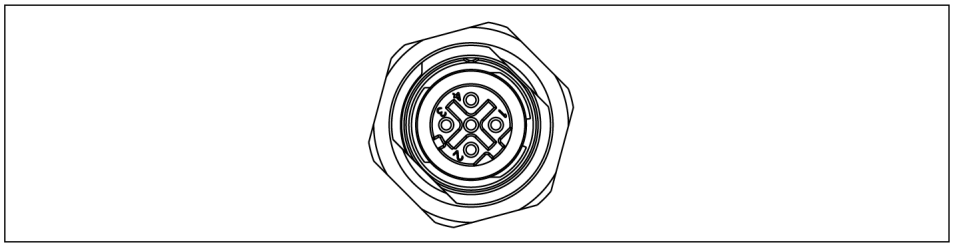

PIN allocation socket, communication

1	Tx+
2	Rx+
3	Tx-
4	Rx-

5.4.1.2 IO-Link

Voltage supply and communication

The voltage supply and communication interface is achieved via a black A-coded M12 connector.

For supply currents that the IO-Link master does not support, the product must be supplied via a separate power supply unit and a Y-distributor, ▸ 5.4.3 [🗋 55].

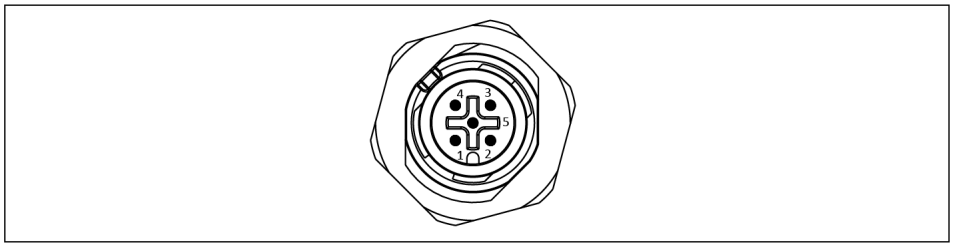

PIN allocation connector X1

1	+24 V Logic
2	+24 V Power
3	GND Logic
4	C/Q (Communication)
5	GND Power

5.4.1.3 Modbus RTU

Voltage supply and communication

The voltage supply and communication interface is achieved via a yellow A-coded M12 connector.

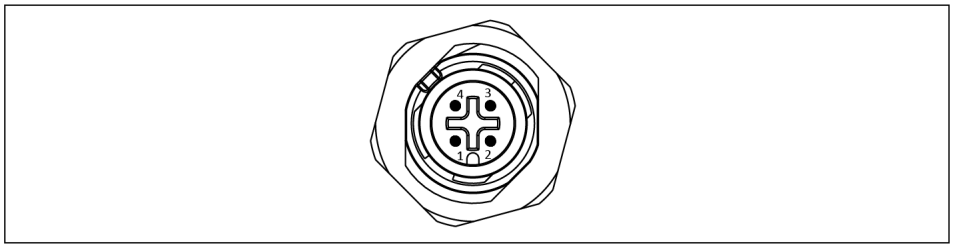

PIN allocation connector X1

1	+ 24 V Logic, Logic
2	BUS_A
3	GND Logic, Logic
4	BUS_B

5.4.2 Cable connections

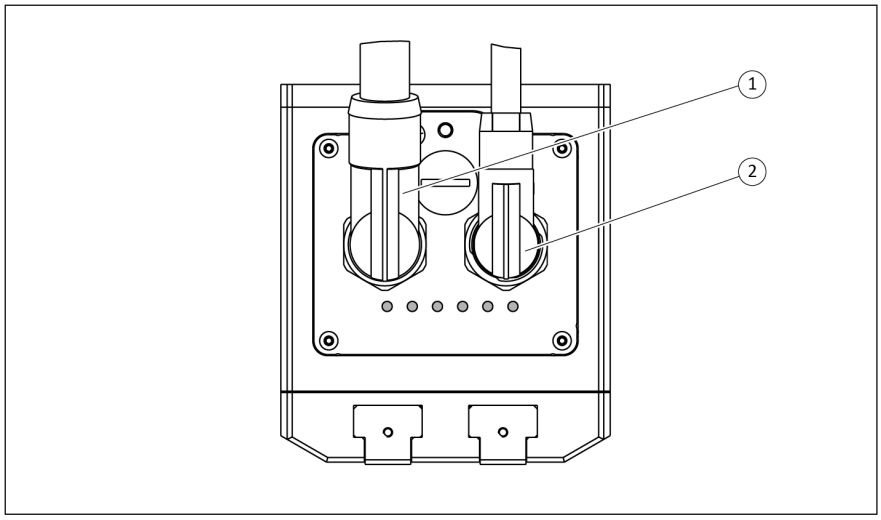

Cable outlets, example PROFINET, EtherNet/IP™, EtherCAT®

1	Cable connector voltage supply
2	Cable connector communication

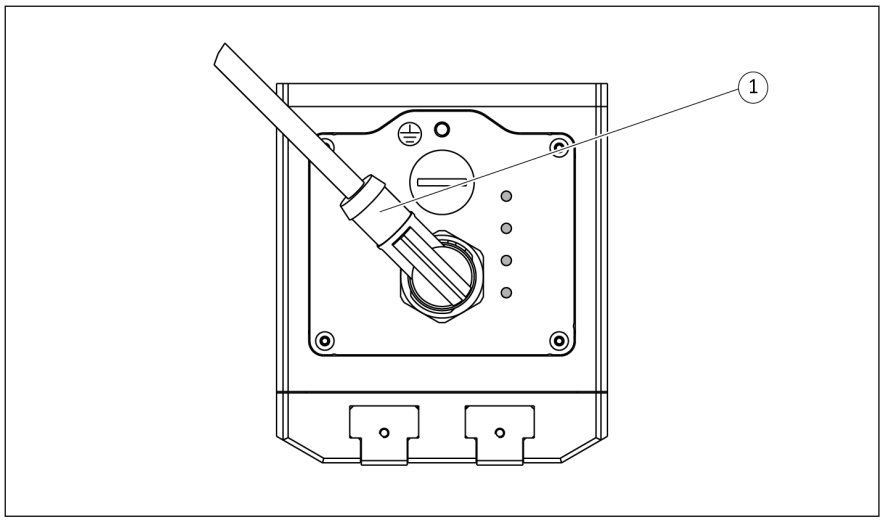

Cable outlet, example IO-Link, Modbus RTU

1	Cable connector voltage supply and communication

NOTICE

Material damage due to incorrect assembly!

- When connecting the cable, observe the maximum tightening torque of 0.8 Nm for the cable and do not exceed this amount.
  SCHUNK recommends using a suitable tool to generate the required tightening torque, thereby ensuring a permanently functioning communication and energy connection.
- Make sure that the connections are not stressed due to pulling or pressure forces or due to vibrations. Apply the corresponding strain relief devices if required.

5.4.3 Connection diagram

Connection diagram for PROFINET, EtherNet/IP™, EtherCAT®

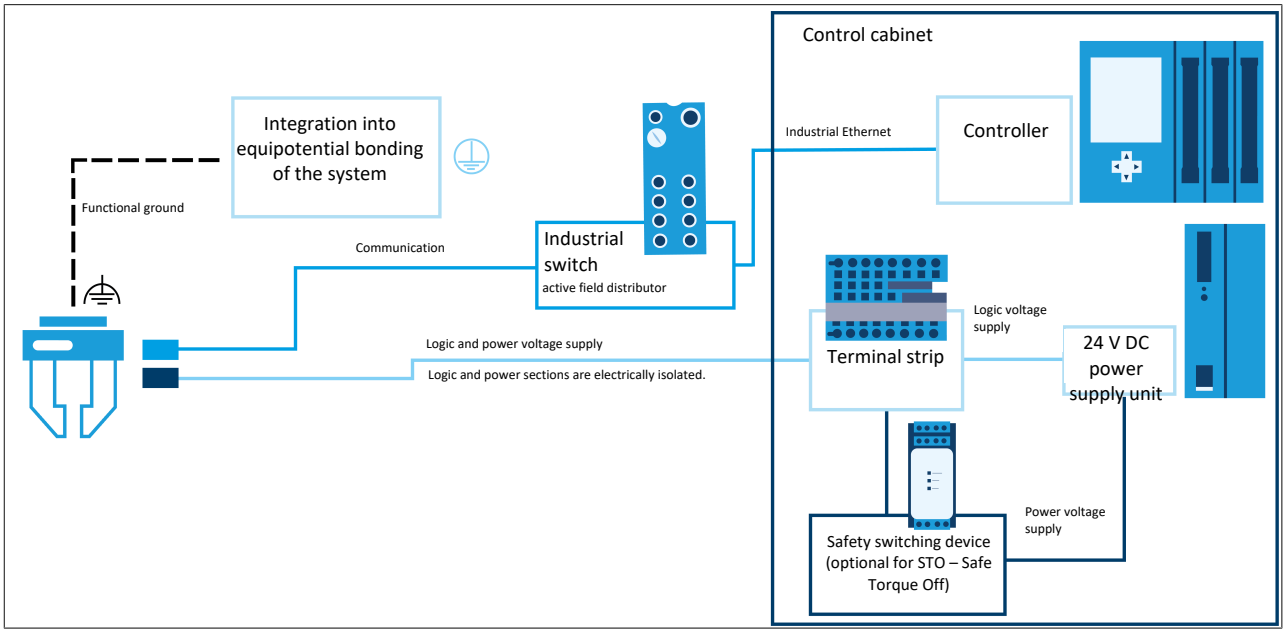

Connection diagram EGU-PN, -EI, -EC

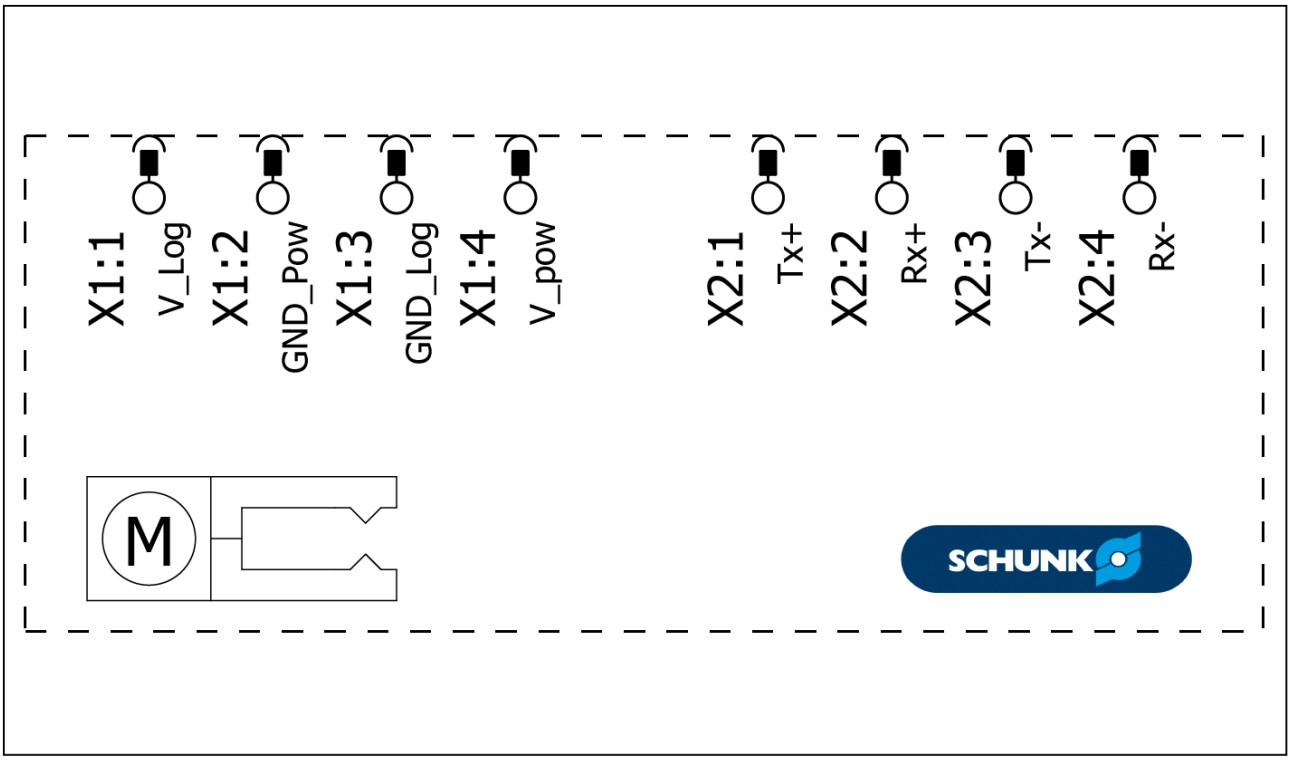

Connection diagram EPLAN, EGU-PN, -EI, -EC

Connection diagram for IO-Link

Observe the rated currents and maximum current consumption of the product, ▶ 3 [🗋 18]!

Power and logic voltage supply via Class B master:

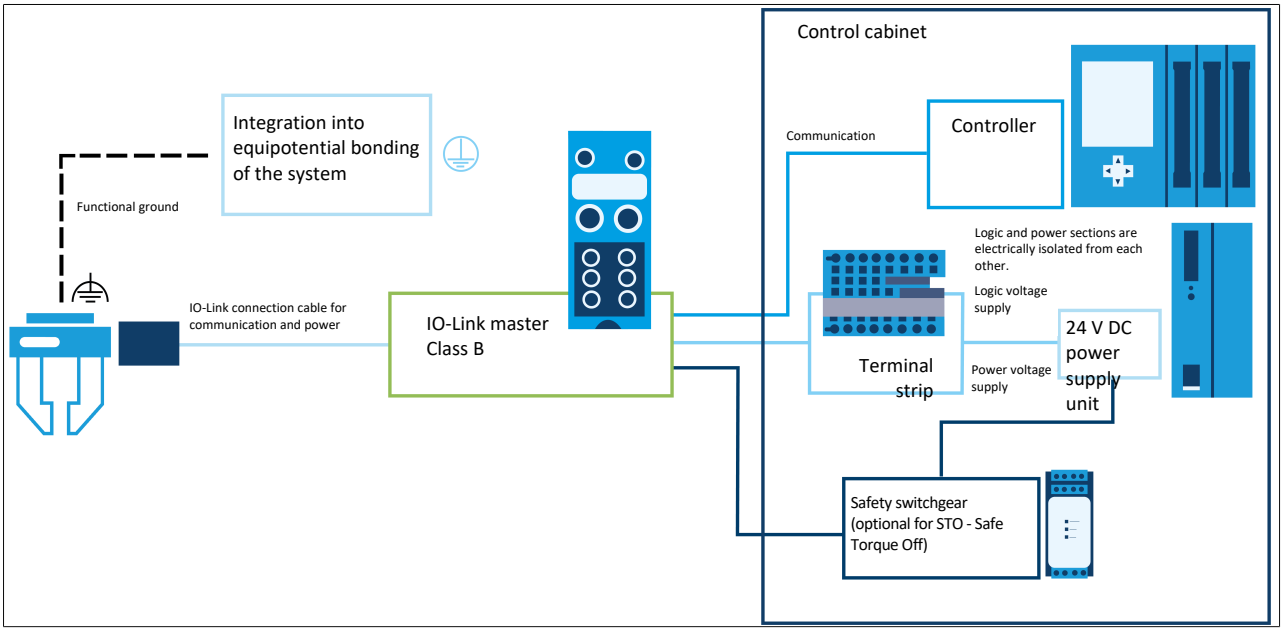

Connection diagram EGU-IL

Power voltage supply via additional voltage source:

Application: Supply currents of the product are greater than current consumption of the IO-Link master.

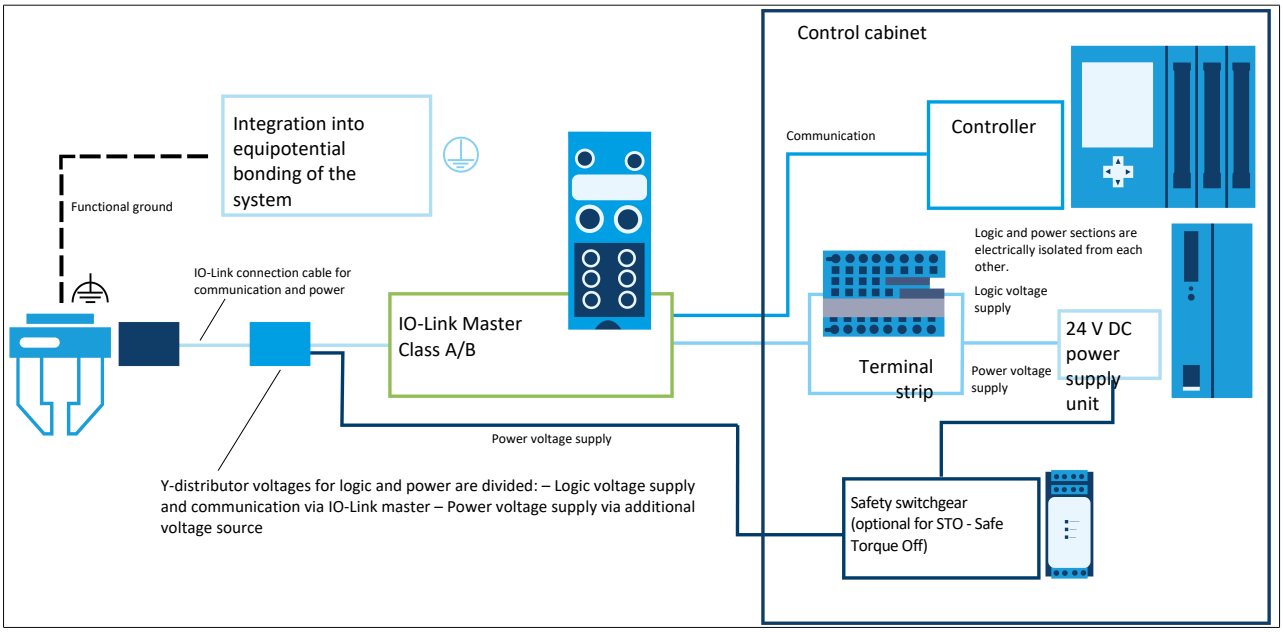

Connection diagram with Y-distributor EGU-IL

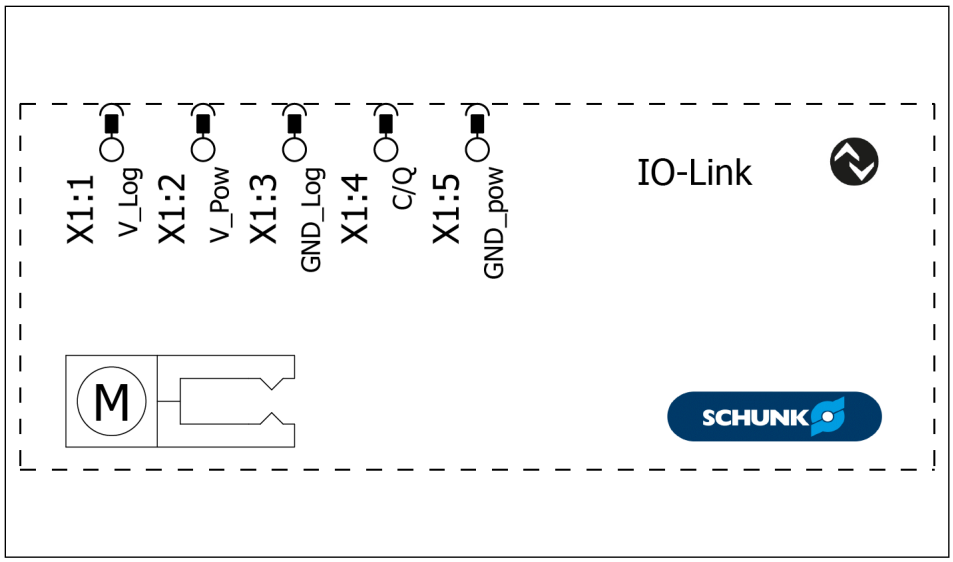

Connection diagram EPLAN, EGU-IL

Connection diagram for Modbus RTU

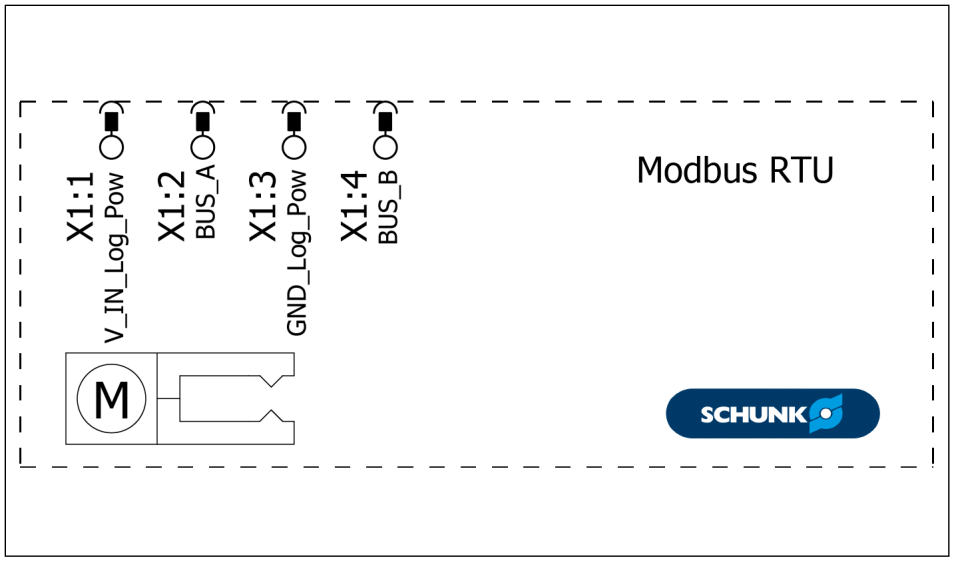

Connection diagram EPLAN, EGU-MB

5.4.4 Switching off the power supply by external safety switchgear

The connections to the voltage supply are intended for the safety-related shutdown of the product by a higher-level SRP/CS. Accordingly, the power section of the product can be disconnected by turning off the voltage supply (+24V_power, GND power). This ensures that the product's motor can no longer perform any dangerous movements.

Meanwhile, the logic supply (+24V_Logic, GND_Logic) can remain actively connected, thereby enabling the product's communication capability to be maintained.

This is possible because the power section of the internal electronics is electrically isolated from the logic section. The galvanic isolation is dimensioned as follows in accordance with DIN EN 60664-1:

- Overvoltage category II (0.5 kV)
- Degree of contamination 2
- Operation at altitudes up to 3500 m above sea level

Note: This does **not** apply to the Modbus RTU variant.

Implementation of an STO (Safe Torque Off) with stop category 0 according to EN 60204-1 or EN ISO 13849-1

By implementing category III or IV in accordance with EN ISO 13849-1, a "stop category 0" stop function can be implemented by using a safety relay with forcibly guided main contacts connected in series, as shown.

NOTE

The voltage supply from the actuator/motor is buffered in the product with a DC link capacity of 240 µF.

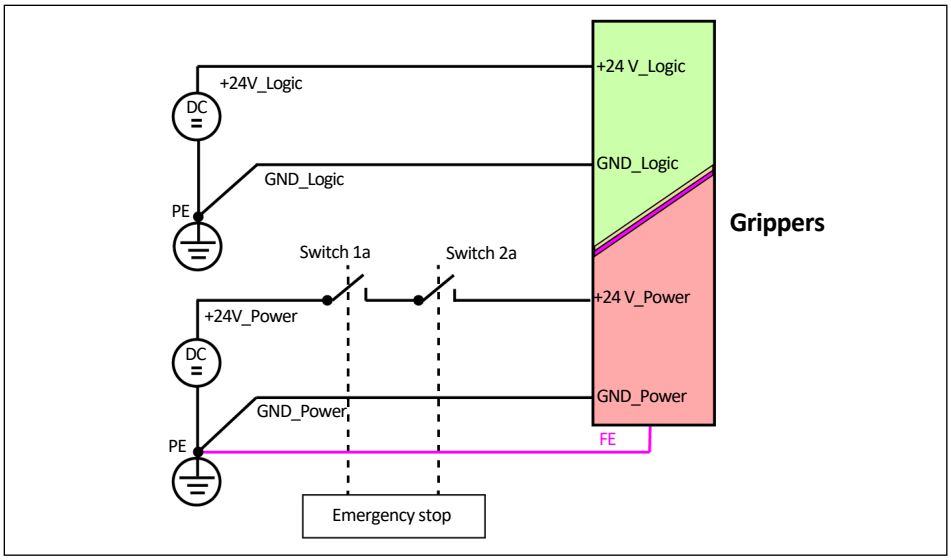

Fuse protection, dual channel / PL d Cat. III

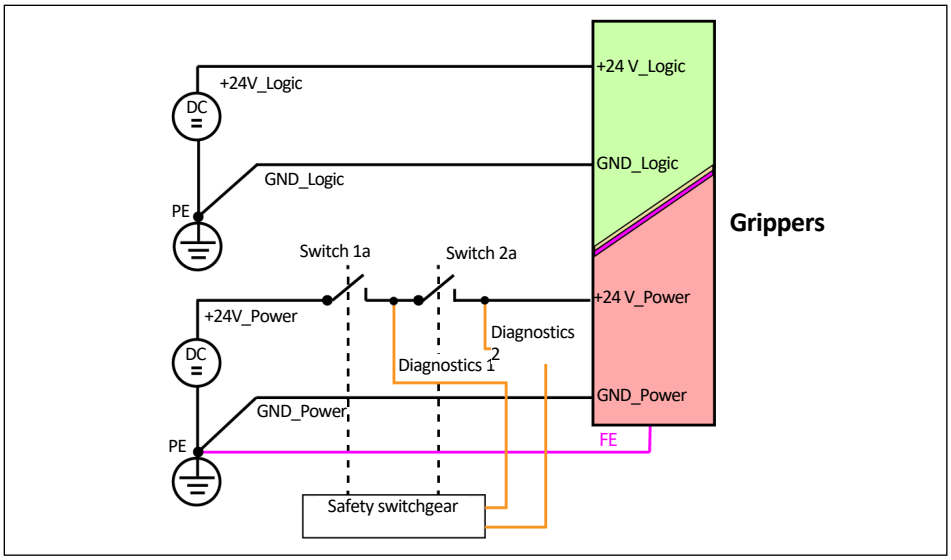

Fuse protection, dual channel / PL e Cat. IV

5.4.5 External protection

The power circuit for the product must be protected at the customer site by a circuit breaker, ▶ 3 [🗋 18].

5.4.6 Connecting the ground cable (functional ground)

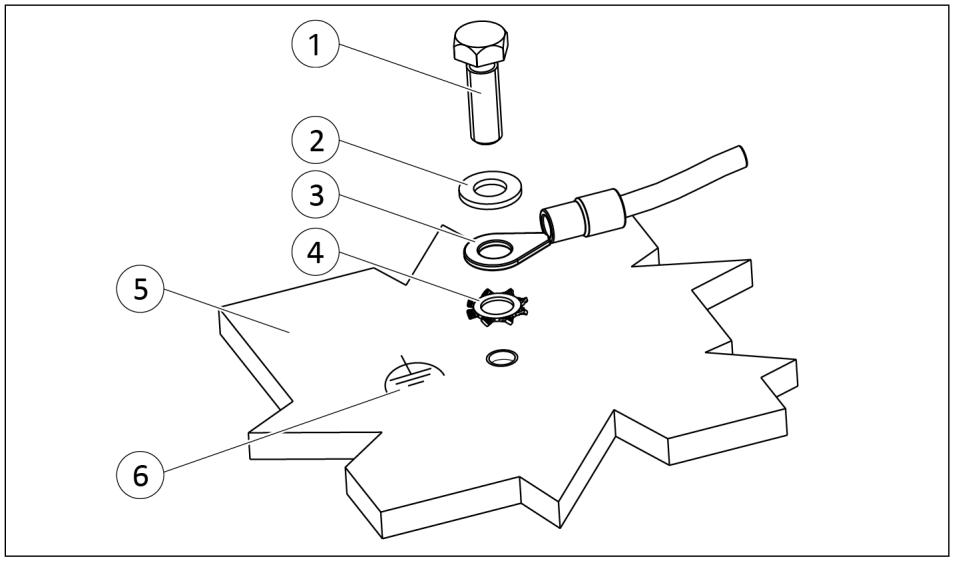

Ground connection

1	Screw *	4	Toothed lock washer
2	Washer	5	Product
3	Cable lug	6	Ground marking

* Tightening torque: 1 Nm

In delivery state, the mounted screw serves to maintain the IP protection. For the connection of the grounding cable (functional ground), the screw must be replaced. A minimum screw-in depth of 6 mm is recommended (for maximum screw-in depth, see catalog data sheet).



A ground connection with a sufficient cross-section must be established between the product and the machine on the customer's premises.
Mount the ground cable (functional ground) on the threaded hole marked with the ground marking.

NOTE

Only connect the ground cable (functional ground) at the location intended for this purpose.

Always mount the ground cable individually. A green-yellow wire strand color is not permitted.

Always use all components to fasten the ground cable (functional ground) and install them in this order: toothed lock washer, cable lug, washer and screw. See "Ground connection" diagram. Observe the tightening torque.

6 Commissioning

NOTE

Information on commissioning the product is provided in the interface-specific and robot-specific commissioning instructions, ▶ 1.1.5 [🗋 8]

7 Operation

7.1 Safety



⚠ WARNING

Risk of injury from objects falling and being ejected!

Falling and ejected objects during operation can lead to serious injury or death.

- Take suitable protective measures to secure the danger zone.



⚠ WARNING

Risk of injury from falling objects if the power supply fails!

If the power supply fails, the gripping force decreases and it cannot be guaranteed that the gripped workpiece will be held securely.

- Take suitable measures to secure the danger zone.



⚠ CAUTION

Hearing damage due to noise!

The noise occurring in the work area can cause hearing damage.

- Wear hearing protection during work that generates a particularly high noise level.

7.2 Operating behavior of the product

If a product is connected, the following operating behavior will be exhibited:

- **Behavior when switching on the voltage supply:**
  - After switching on the voltage supply, the product will start in the error state (ERR_FAST_STOP) and will not perform any movements.
  - The product will only perform movements if the existing error was acknowledged and the product is driven by the superordinate control system.
- **Behavior on canceling the connection between the superordinate control system and the product:**
  When canceling the connection, the product will switch to the error state (ERR_FAST_STOP) and will not perform any movements.
- **With PROFINET: Behavior with IOPS=BAD:**
  The superordinate control system will send data to the product periodically. The data qualifier IOPS contained there will provide information about the validity of the initial data. If this data qualifier has the value "BAD", the product switches to the error state (ERR_FAST_STOP) and will not perform any movements.

8 Troubleshooting

8.1 Safety



⚠ WARNING

Risk of injury due to sudden movements!

If the energy supply is switched on, or if residual energy is still present in the system, this can cause components to move unexpectedly, which may result in serious injuries.

- Before starting any work on the product: Switch off the energy supply and secure against re-connection.
- Ensure that no residual energy remains in the system.



⚠ WARNING

Risk of injury from crushing and impacts!

Serious injury could occur during movement of the base jaw, due to breakage or loosening of the gripper fingers or if the workpiece is lost.

- Wear suitable protective equipment.
- Do not reach into the open mechanism or the movement area of the product.



⚠ CAUTION

Risk of injury due to electromagnetic interference!

Electromagnetic interference can cause malfunctions and lead to unexpected movements.

- Use electrical components, e.g. sensors, controllers, etc. according to EN 61000-5-7.

NOTE

- For information on error codes and possible troubleshooting measures, see the commissioning instructions, ▸ 1.1.5 [🗋 8].
- For information on LEDs, see chapter ▸ 4.3.1 [🗋 35].
- Contact SCHUNK Service if troubleshooting with the measures listed below was not successful.

8.2 Communication malfunction

Possible cause	Remedial measures
The connection between the product and PLC was interrupted	Check communication cable for correct connection.
	Check communication cable for damage and replace if necessary.

8.3 Product moves in a jerky fashion, is sluggish or blocked

Possible cause	Remedial measures
Product is overloaded	Check load situation, e.g. maximum permissible finger weight, maximum permissible finger length, load data of the base jaws.
Voltage supply malfunction	Check the power output of the power supply unit.
	Check power cable line and cable cross sections (high loss of voltage possible with 24 VDC power supply).
	Check power cable line for shorts and cable breakage.
No voltage connected. (emergency stop chain interrupted, safety light curtain triggered.)	Check the voltage supply requirements. ▸ 3 [🗋 18].
There is not enough voltage.	
Dirt deposits on product (increasing sluggishness)	Clean the product. ▸ 9.2 [🗋 65] Allow dirt to fall off by changing the orientation of the product.
Too little grease in the mechanical guiding areas.	Reduce external influences that can cause grease to wash out. • Enable liquids to drain off by changing the orientation of the product, thus reducing the amount of grease washing out in the guide • Avoid movement of the base jaws during exposure to splash water to reduce grease from washing out in the guide.
	Clean and lubricate product. ▸ 9.2 [🗋 65]

Possible cause	Remedial measures
IP protection class is not suitable for the application.	Observe the permissible protection class. ▸ 3.6 [🗋 24]
	Have SCHUNK retrofit the dust protection variant.
Tightening torque of the screw connection too high, uneven mounting surface	Observe the permissible tightening torques, check the flatness of the mounting surface. ▸ 5.3 [🗋 45].
Brake does not release	Check the ambient temperature requirements. ▸ 3.6 [🗋 24]
	Warm up product, e.g. by sending the command again.
Product is in the "Temperature error" status in StrongGrip mode.	• Increasing the pause time • Reducing the re-gripping time • Improving the heat dissipation • Reducing the ambient temperature • Reducing the gripping force (optimization of workpiece handling, e.g. by form-fit gripping), ▸ 3 [🗋 18].

9 Maintenance

9.1 Safety



⚠ WARNING

Risk of injury due to sudden movements!

If the energy supply is switched on, or if residual energy is still present in the system, this can cause components to move unexpectedly, which may result in serious injuries.

- Before starting any work on the product: Switch off the energy supply and secure against re-connection.
- Ensure that no residual energy remains in the system.

NOTICE

Material damage due to improper disassembly!

Incorrect works can cause damage to the mechanics and internal electronics.

- Disassembly or opening of the product is not permitted.
- Only allow SCHUNK to repair the product.

9.2 Maintenance intervals

The product is maintenance-free provided that the ambient and operating conditions are met, ▶ 3.6 [🗋 24].

Although the product is maintenance-free, it should be regularly inspected visually to ensure that it functions properly.

In the case of extended ambient and operating conditions, such as

- Contaminated environments
- High temperatures

the product must be cleaned, checked for damage and wear or relubricated as required.

In the product's dustproof variant (SD), the base jaws, pinion and gear rack are additionally protected as compared to the basic variant.

In the case of permanent exposure to splash water on all sides, the partially open guide may cause the guide grease to be washed out over the service life of the product. The grease content in the guide is continuously reduced by the moving base jaws. The product must therefore be relubricated at regular intervals.

In doing so, observe the following:

- Perform all maintenance work without a gripped workpiece!
- Blow all coarse dirt and chips out of the cavities in the product with compressed air.
- Clean product with a solvent-free cleaning agent.
- Apply a thin film of grease to the metallic sliding surfaces with a lint-free cloth.
  Recommended grease: ▸ 3.9 [🗋 33]
- Have all repair work on the product carried out only by SCHUNK.

This will help achieve a long service life even under more extreme ambient and operating conditions.

10 Disassembly and Disposal



⚠ WARNING

Risk of injury due to sudden movements!

If the energy supply is switched on, or if residual energy is still present in the system, this can cause components to move unexpectedly, which may result in serious injuries.

- Before starting any work on the product: Switch off the energy supply and secure against re-connection.
- Ensure that no residual energy remains in the system.



Disposal Precautions

Improper disposal of this product may pose hazards that could result in serious injury, significant property damage, and environmental damage.

- Remove any lubricants present and dispose of them in an environmentally responsible manner.
- Recycle or properly dispose of the product's components in accordance with local regulations.

11 Compatibility with robots

The following tables show the compatibility of the grippers with the robot. The maximum power consumption of the gripper and the maximum power output of the robot are considered. The payload and the dead weight of the gripper unit are not balanced. SCHUNK recommends that the payload of the robot will be considered in detail.

NOTE

Due to technical changes, the compatibility overviews may be outdated. Therefore, SCHUNK recommends performing a detailed comparison with the current data sheets of the robot model. For further questions please contact SCHUNK!

11.1 ABB

Compatibility overview: EGU with ABB robots

Size	Gripping force mode/ Nominal gripping force	ABB					
		CRB 1100	CRB 1300	CRB 15000	IRB 1100	IRB 1200	IRB 1300
SG: one mounted product							
EGU 50	BasicGrip/100%	✓	✓	✓	✓	✓	✓
EGU 50	StrongGrip/200%	✓	✓	✓	✓	✓	✓
EGU 60	BasicGrip/100%	✓	✓	✓	✓	✓	✓
EGU 60	StrongGrip/200%	!	!	!	!	!	!
EGU 70	BasicGrip/100%	✓	✓	✓	✓	✓	✓
EGU 70	StrongGrip/150%	✓	✓	✓	✓	✓	✓
EGU 80	BasicGrip/100%	!	!	!	!	!	!
EGU 80	StrongGrip/200%	!	!	!	!	!	!
DG: two mounted products							
EGU 50	BasicGrip/100%	!	!	!	!	!	!
EGU 50	StrongGrip/200%	✓	✓	✓	✓	✓	✓
EGU 60	BasicGrip/100%	!	!	!	!	!	!
EGU 60	StrongGrip/200%	✗	✗	✗	✗	✗	✗
EGU 70	BasicGrip/100%	!	!	!	!	!	!
EGU 70	StrongGrip/150%	✗	✗	✗	✗	✗	✗
EGU 80	BasicGrip/100%	!	!	!	!	!	!
EGU 80	StrongGrip/200%	✗	✗	✗	✗	✗	✗

Legend:

✓ The power consumption of the gripper is within the range of the power delivered by the robot.

! The power consumption of the gripper exceeds the power delivered by the robot. Compatibility could be possible through restrictions of gripping parameters, e.g. by reducing the gripping force.

✗ The power consumption of the gripper exceeds the power delivered by the robot. Gripper and robot are not compatible.

11.2 Universal Robots

Compatibility overview: EGU with UR robots

Size	Gripping Force Mode/ Nominal gripping force	UR							
		3e	7e	12e	10g	17g	18g	20	30
SG: one mounted product									
EGU 50	BasicGrip / 100%	✓	✓	✓	✓	✓	✓	✓	✓
EGU 50	StrongGrip / 200%	✗	✓	✓	✓	✓	✓	✓	✓
EGU 60	BasicGrip / 100%	✗	✓	✓	✓	✓	✓	✓	✓
EGU 60	StrongGrip / 200%	✗	✗	✗	✓	✓	✓	✗	✗
EGU 70	BasicGrip / 100%	✗	!	!	✓	✓	✓	!	!
EGU 70	StrongGrip / 150%	✗	✗	!	✓	✓	✓	!	!
EGU 80	BasicGrip / 100%	✗	!	!	✓	✓	✓	!	!
EGU 80	StrongGrip / 200%	✗	✗	✗	✓	✓	✓	✗	✗
DG: two mounted products									
EGU 50	BasicGrip / 100%	✗	!	!	✓	✓	✓	!	!
EGU 50	StrongGrip / 200%	✗	✗	!	✓	✓	✓	!	!
EGU 60	BasicGrip / 100%	✗	✗	!	✓	✓	✓	!	!
EGU 60	StrongGrip / 200%	✗	✗	✗	✗	✗	✗	✗	✗
EGU 70	BasicGrip / 100%	✗	✗	!	✓	✓	✓	!	!
EGU 70	StrongGrip / 150%	✗	✗	✗	✗	✗	✗	✗	✗
EGU 80	BasicGrip / 100%	✗	✗	✗	!	!	!	✗	✗
EGU 80	StrongGrip / 200%	✗	✗	✗	✗	✗	✗	✗	✗

Legend:

✓ The power consumption of the gripper is within the range of the power delivered by the robot.

! The power consumption of the gripper exceeds the power delivered by the robot. Compatibility could be possible through restrictions of gripping parameters, e.g. by reducing the gripping force.

✗ The power consumption of the gripper exceeds the power delivered by the robot. Gripper and robot are not compatible.

11.3 FANUC

Compatibility overview: EGU with FANUC robots

Size	Gripping force mode/ Nominal gripping force	FANUC				
		CRX 5iA	CRX 10iA/10iA/L	CRX 20	CRX 25	CRX 30
SG: one mounted product						
EGU 50	BasicGrip/100%	✓	✓	✓	✓	✓
EGU 50	StrongGrip/200%	✓	✓	✓	✓	✓
EGU 60	BasicGrip/100%	✓	✓	✓	✓	✓
EGU 60	StrongGrip/200%	✗	✗	✗	✗	✗
EGU 70	BasicGrip/100%	!	!	!	!	!
EGU 70	StrongGrip/150%	!	!	!	!	!
EGU 80	BasicGrip/100%	!	!	!	!	!
EGU 80	StrongGrip/200%	✗	✗	✗	✗	✗
DG: two mounted products						
EGU 50	BasicGrip/100%	!	!	!	!	!
EGU 50	StrongGrip/200%	!	!	!	!	!
EGU 60	BasicGrip/100%	!	!	!	!	!
EGU 60	StrongGrip/200%	✗	✗	✗	✗	✗
EGU 70	BasicGrip/100%	!	!	!	!	!
EGU 70	StrongGrip/150%	✗	✗	✗	✗	✗
EGU 80	BasicGrip/100%	✗	✗	✗	✗	✗
EGU 80	StrongGrip/200%	✗	✗	✗	✗	✗

Legend:

- ✓ The power consumption of the gripper is within the range of the power delivered by the robot.
- ! The power consumption of the gripper exceeds the power delivered by the robot. Compatibility could be possible through restrictions of gripping parameters, e.g. by reducing the gripping force.
- ✗ The power consumption of the gripper exceeds the power delivered by the robot. Gripper and robot are not compatible.

11.4 YASKAWA

NOTE

Due to the external cabling with a separate power supply, no restriction is to be expected with regard to the maximum power consumption of the gripper and the maximum power output of the robot.

A suitable power supply unit is available as an accessory from SCHUNK.

SCHUNK SE & Co. KG
Spanntechnik | Greiftechnik | Automatisierungstechnik

Bahnhofstr. 106 – 134
D-74348 Lauffen/Neckar
Tel. +49-7133-103-0
info@de.schunk.com
schunk.com

Folgen Sie uns | *Follow us*

Wir drucken nachhaltig | *We print sustainable*

09–2026 © 2026 SCHUNK SE & Co. KG 17.00 | EGU | Assembly and operating manual | en-US | 1513986